SUBJECT PAGE NO.

2.1 FASTENER TORQUE VALUES..... 2-1
2.2 SPECIFICATIONS..... 2-6
2.3 VEHICLE IDENTIFICATION NUMBER (VIN)..... 2-9
2.4 FRONT WHEEL..... 2-11
2.5 REAR WHEEL..... 2-18
2.6 SEALED WHEEL BEARINGS..... 2-22
2.7 WHEEL LACING..... 2-26
2.8 CHECKING AND TRUING WHEELS..... 2-31
2.9 VEHICLE ALIGNMENT..... 2-37
2.10 FRONT BRAKE MASTER CYLINDER..... 2-39
2.11 FRONT BRAKE CALIPER..... 2-43
2.12 REAR BRAKE MASTER CYLINDER..... 2-49
2.13 REAR BRAKE CALIPER..... 2-54
2.14 BRAKE LINES..... 2-58
2.15 ABS MODULE (EHCU)..... 2-65
2.16 BLEEDING BRAKES..... 2-68
2.17 TIRES..... 2-70
2.18 FRONT FORK..... 2-74
2.19 STEERING HEAD..... 2-85
2.20 BELT GUARD AND DEBRIS DEFLECTOR..... 2-89
2.21 THROTTLE CONTROL..... 2-91
2.22 REAR SHOCK ABSORBERS..... 2-93
2.23 REAR FORK..... 2-94
2.24 CLUTCH CONTROL..... 2-96
2.25 HANDLEBAR: FLD..... 2-97
2.26 HANDLEBAR: FXDB, FXDBC, FXDBP, FXDBF AND FXDWG..... 2-99
2.27 HANDLEBAR: FXDL..... 2-104
2.28 FRONT FENDER..... 2-107
2.29 REAR FENDER..... 2-108
2.30 SEAT..... 2-117
2.31 FOOTBOARDS AND FOOTRESTS..... 2-120
2.32 HEADLAMP NACELLE: FLD..... 2-124
2.33 WINSHIELD: FLD..... 2-125
2.34 SADDLEBAGS: FLD..... 2-128
2.35 JIFFY STAND..... 2-133
2.36 FORK LOCK..... 2-137
2.37 ENGINE MOUNTS..... 2-139
2.38 SAREE GUARD: INDIA MODELS..... 2-141
2.39 MEDAILLONS, BADGES AND TANK EMBLEMS..... 2-142

NOTES

FASTENER TORQUE VALUES IN THIS CHAPTER

The table below lists torque values for all fasteners presented in this chapter.

FASTENER	TORQUE VALUE		NOTES
ABS brake line flare nuts	120-144 **in-lbs**	13.6-16.3 Nm	2.14 BRAKE LINES, Front Master Cylinder to Front Caliper Line Assembly
ABS brake line flare nuts	120-144 **in-lbs**	13.6-16.3 Nm	2.14 BRAKE LINES, ABS Module to Front Manifold Brake Lines
ABS module to bracket fastener	50-70 **in-lbs**	5.6-7.9 Nm	2.15 ABS MODULE (EHCU), Electro Hydraulic Control Unit (EHCU)
ABS module to frame fastener	90-114 **in-lbs**	10.2-12.8 Nm	2.15 ABS MODULE (EHCU), Electro Hydraulic Control Unit (EHCU)
Axle cap fastener, front: all but FLD	132-180 **in-lbs**	14.9-20.3 Nm	2.4 FRONT WHEEL, Installation
Axle cap fastener, rear: all but FLD	132-180 **in-lbs**	14.9-20.3 Nm	2.4 FRONT WHEEL, Installation
Axle nut, front	70-75 ft-lbs	95.0-101.6 Nm	2.4 FRONT WHEEL, Installation
Axle pinch bolt, front: FLD	18-22 ft-lbs	24.4-29.9 Nm	2.4 FRONT WHEEL, Installation
Banjo bolt to ABS module	14-18 ft-lbs	18.9-24.4 Nm	2.14 BRAKE LINES, ABS Module to Front Manifold Brake Lines
Banjo bolt to ABS module	14-18 ft-lbs	18.9-24.4 Nm	2.14 BRAKE LINES, Rear Master Cylinder to ABS Module
Banjo bolt to ABS module	14-18 ft-lbs	18.9-24.4 Nm	2.14 BRAKE LINES, ABS Module to Rear Brake Caliper
Banjo bolt to ABS module	14-18 ft-lbs	18.9-24.4 Nm	2.15 ABS MODULE (EHCU), Electro Hydraulic Control Unit (EHCU)
Banjo bolt to front caliper	17-22 ft-lbs	23.0-29.8 Nm	2.14 BRAKE LINES, Front Master Cylinder to Front Caliper Line Assembly
Banjo bolt to front master cylinder	17-22 ft-lbs	23.0-29.8 Nm	2.10 FRONT BRAKE MASTER CYLINDER, Assembly and Installation
Banjo bolt to front master cylinder	17-22 ft-lbs	23.0-29.8 Nm	2.14 BRAKE LINES, Front Master Cylinder to Front Caliper Line Assembly
Banjo bolt to rear caliper	17-22 ft-lbs	23.0-29.8 Nm	2.14 BRAKE LINES, ABS Module to Rear Brake Caliper
Banjo bolt to rear master cylinder	17-22 ft-lbs	23.0-29.8 Nm	2.12 REAR BRAKE MASTER CYLINDER, Installation
Battery terminal screw	60-70 **in-lbs**	6.8-7.9 Nm	2.25 HANDLEBAR: FLD, Installation
Bottom brake caliper mounting bolt, front	28-38 ft-lbs	38.0-51.5 Nm	2.4 FRONT WHEEL, Installation
Bracket, saddlebag theft prevention: FLD	24-36 **in-lbs**	2.7-4.1 Nm	2.34 SADDLEBAGS: FLD, Saddlebag
Brake bridge bolt/pad pin, front caliper	15-16 ft-lbs	20.3-22.6 Nm	2.11 FRONT BRAKE CALIPER, Assembly
Brake caliper bleeder screw	80-100 **in-lbs**	9.0-11.3 Nm	2.11 FRONT BRAKE CALIPER, Assembly
Brake caliper bleeder screw	80-100 **in-lbs**	9.0-11.3 Nm	2.13 REAR BRAKE CALIPER, Assembly
Brake caliper bleeder valve	80-100 **in-lbs**	9.0-11.3 Nm	2.16 BLEEDING BRAKES, Procedure
Brake caliper bridge bolt, front	28-38 ft-lbs	38.0-51.5 Nm	2.11 FRONT BRAKE CALIPER, Assembly
Brake caliper mounting bolt, rear	120-168 **in-lbs**	13.6-18.9 Nm	2.13 REAR BRAKE CALIPER, Installation
Brake disc screws, rear	30-45 ft-lbs	40.7-61.0 Nm	2.5 REAR WHEEL, Assembly
Brake disc screws: front wheel	16-24 ft-lbs	21.7-32.5 Nm	2.4 FRONT WHEEL, Assembly
Brake disc screws: front wheel	16-24 ft-lbs	21.7-32.5 Nm	2.4 FRONT WHEEL, Assembly
Brake disc screws: front wheel	16-24 ft-lbs	21.7-32.5 Nm	2.4 FRONT WHEEL, Assembly

FASTENER	TORQUE VALUE		NOTES
Brake disc screws: front wheel	16-24 ft-lbs	21.7-32.5 Nm	2.4 FRONT WHEEL, Assembly
Brake line guard screw: FXDF	45-65 **in-lbs**	5.1-7.3 Nm	2.15 ABS MODULE (EHCU), General
Brake manifold to lower fork: FLD	36-48 **in-lbs**	4.0-5.4 Nm	2.19 STEERING HEAD, Installation: FLD
Brake pad pin, rear caliper	80-120 **in-lbs**	9.0-13.6 Nm	2.13 REAR BRAKE CALIPER, Assembly
Brake switch/banjo bolt to rear master cylinder	17-22 ft-lbs	23.0-29.8 Nm	2.14 BRAKE LINES, Rear Master Cylinder to ABS Module
Cartridge screw: FLD (left side)	10.8-18.0 ft-lbs	14.7-24.5 Nm	2.18 FRONT FORK, Assembly: Cartridge Fork (FLD, Left Side)
Control module housing screw	35-45 **in-lbs**	4.0-5.1 Nm	2.25 HANDLEBAR: FLD, Installation
Control module housing screw	35-45 **in-lbs**	4.0-5.1 Nm	2.25 HANDLEBAR: FLD, Installation
Debris deflector screws	40-60 **in-lbs**	4.5-6.8 Nm	2.5 REAR WHEEL, Installation
Debris deflector screws	40-60 **in-lbs**	4.5-6.8 Nm	2.20 BELT GUARD AND DEBRIS DEFLECTOR, Debris Deflector Installation
Engine mount flange nut	22-27 ft-lbs	29.9-36.6 Nm	2.37 ENGINE MOUNTS, Installation
Footrest mounting screws and nuts	84-108 **in-lbs**	9.5-12.2 Nm	2.31 FOOTBOARDS AND FOOTRESTS, Rider Footrests: Mid Controls
Footrest mounting screws and nuts	84-108 **in-lbs**	9.5-12.2 Nm	2.31 FOOTBOARDS AND FOOTRESTS, Rider Footrests: Forward Controls
Footrest support mounting screws	30-40 ft-lbs	40.7-54.2 Nm	2.31 FOOTBOARDS AND FOOTRESTS, Rider Footrests: Mid Controls
Footrest support mounting screws	30-40 ft-lbs	40.7-54.2 Nm	2.31 FOOTBOARDS AND FOOTRESTS, Rider Footrests: Mid Controls
Footrest support mounting screws	32-37 ft-lbs	43.4-50.2 Nm	2.31 FOOTBOARDS AND FOOTRESTS, Rider Footrests: Forward Controls
Footrest support mounting screws	32-37 ft-lbs	43.4-50.2 Nm	2.31 FOOTBOARDS AND FOOTRESTS, Rider Footrests: Forward Controls
Fork stem nut: FLD	70-80 ft-lbs	94.9-108.4 Nm	2.19 STEERING HEAD, Installation: FLD
Fork tube cap: FLD (left side)	22-59 ft-lbs	30-80 Nm	2.18 FRONT FORK, Assembly: Cartridge Fork (FLD, Left Side)
Fork tube caps	22-59 ft-lbs	30-80 Nm	2.18 FRONT FORK, Assembly: All But FLD Left Side
Front and rear isolator mounting bolts to frame	22-27 ft-lbs	29.9-36.6 Nm	2.9 VEHICLE ALIGNMENT, Inspection
Front belt guard fastener	120-180 **in-lbs**	13.6-20.3 Nm	2.20 BELT GUARD AND DEBRIS DEFLECTOR, Belt Guard Installation
Front brake caliper lower mounting bolt	28-38 ft-lbs	38.0-51.5 Nm	2.11 FRONT BRAKE CALIPER, Installation
Front brake caliper upper mounting bolt	28-38 ft-lbs	38.0-51.5 Nm	2.11 FRONT BRAKE CALIPER, Installation
Front brake line manifold fastener	36-48 **in-lbs**	4.1-5.4 Nm	2.14 BRAKE LINES, Front Master Cylinder to Front Caliper Line Assembly
Front caliper banjo bolt	17-22 ft-lbs	23.1-29.9 Nm	2.11 FRONT BRAKE CALIPER, Installation
Front engine bracket bolts to engine	25-32 ft-lbs	34.0-43.3 Nm	2.37 ENGINE MOUNTS, Installation
Front fender nuts: all	15-21 ft-lbs	20.3-28.5 Nm	2.28 FRONT FENDER, Installation
Front fork seat pipe screw	30-37 ft-lbs	40-50 Nm	2.18 FRONT FORK, Assembly: All But FLD Left Side
Front isolator mounting bolts to frame	22-27 ft-lbs	29.9-36.6 Nm	2.37 ENGINE MOUNTS, Installation
Front isolator mounting bolts to front engine bracket	22-27 ft-lbs	29.9-36.6 Nm	2.37 ENGINE MOUNTS, Installation
Front isolator mounting bolts to front engine bracket	18-22 ft-lbs	24.4-29.9 Nm	2.9 VEHICLE ALIGNMENT, Inspection
Front master cylinder reservoir cover screws	6-8 **in-lbs**	0.7-0.9 Nm	2.16 BLEEDING BRAKES, Procedure

FASTENER	TORQUE VALUE		NOTES
Hand control module housing screws	35-45 **in-lbs**	4.0-5.1 Nm	2.10 FRONT BRAKE MASTER CYLINDER, Assembly and Installation
Hand control module screws	35-45 **in-lbs**	4.0-5.1 Nm	2.21 THROTTLE CONTROL, Assembly/Installation
Handlebar clamp fastener: FXDL	12-16 ft-lbs	16.3-21.7 Nm	2.27 HANDLEBAR: FXDL, Installation
Handlebar master cylinder clamp screws	60-80 **in-lbs**	6.8-9.0 Nm	2.10 FRONT BRAKE MASTER CYLINDER, Assembly and Installation
Handlebar riser bolts: FLD	30-40 ft-lbs	40.7-54.2 Nm	2.19 STEERING HEAD, Installation: FLD
Handlebar riser bolts: FLD	30-40 ft-lbs	40.7-54.2 Nm	2.32 HEADLAMP NACELLE: FLD, Upper and Lower Nacelle
Handlebar riser clamp screws	12-16 ft-lbs	16.3-21.7 Nm	2.27 HANDLEBAR: FXDL, Handlebar and Riser Adjustment
Handlebar riser fastener: FLD	30-40 ft-lbs	40.7-54.2 Nm	2.25 HANDLEBAR: FLD, Installation
Handlebar riser fastener: FXDB, FXDBC, FXDBP final tightening	30-40 ft-lbs	40.7-54.2 Nm	2.26 HANDLEBAR: FXDB, FXDBC, FXDBP, FXDF AND FXDWG, Installation
Handlebar riser fastener: FXDF, FXDWG, final tightening	30-40 ft-lbs	40.7-54.2 Nm	2.26 HANDLEBAR: FXDB, FXDBC, FXDBP, FXDF AND FXDWG, Installation
Headlight to nacelle: FLD	7-10 **in-lbs**	0.8-1.1 Nm	2.19 STEERING HEAD, Installation: FLD
Headlight to nacelle: FLD	7-10 **in-lbs**	0.8-1.1 Nm	2.32 HEADLAMP NACELLE: FLD, Upper and Lower Nacelle
Jiffy stand sensor screw	96-144 **in-lbs**	10.8-16.3 Nm	2.35 JIFFY STAND, Jiffy Stand Sensor: HDI Models
Lower nacelle fasteners: FLD	84-120 **in-lbs**	9.5-13.5 Nm	2.19 STEERING HEAD, Installation: FLD
Lower nacelle fasteners: FLD	84-120 **in-lbs**	9.5-13.5 Nm	2.32 HEADLAMP NACELLE: FLD, Upper and Lower Nacelle
Lumbar nameplate mounting screw: FXDL	48-60 **in-lbs**	5.4-6.8 Nm	2.30 SEAT, Lumbar Pad: FXDL
Lumbar pad mounting screw: FXDL	48-60 **in-lbs**	5.4-6.8 Nm	2.30 SEAT, Lumbar Pad: FXDL
Master cylinder mounting nut, rear	30-40 ft-lbs	40.7-54.2 Nm	2.12 REAR BRAKE MASTER CYLINDER, Installation
Master cylinder reservoir cover screws: front cover	6-8 **in-lbs**	0.68-0.90 Nm	2.10 FRONT BRAKE MASTER CYLINDER, Assembly and Installation
Master cylinder reservoir cover screws: front cover	6-8 **in-lbs**	0.7-0.9 Nm	2.11 FRONT BRAKE CALIPER, Installation
Master cylinder reservoir rear cover screws: FLD (ABS and non-ABS) and all other non-ABS models	6-8 **in-lbs**	0.68-0.90 Nm	2.12 REAR BRAKE MASTER CYLINDER, Installation
Negative battery fastener: all	60-70 **in-lbs**	6.8-7.9 Nm	2.26 HANDLEBAR: FXDB, FXDBC, FXDBP, FXDF AND FXDWG, Installation
Nut, fork tube cap: FLD (left side)	13.0-16.6 ft-lbs	17.5-22.5 Nm	2.18 FRONT FORK, Assembly: Cartridge Fork (FLD, Left Side)
Passenger footrest screw and nut	84-108 **in-lbs**	9.5-12.2 Nm	2.31 FOOTBOARDS AND FOOTRESTS, Passenger Footrests: All But FXDB
Passenger footrest support mounting screw	25-35 ft-lbs	33.9-47.4 Nm	2.31 FOOTBOARDS AND FOOTRESTS, Passenger Footrests: All But FXDB
Pinch bolts	30-35 ft-lbs	40.7-47.5 Nm	2.18 FRONT FORK, Installation
Pivot shaft nut	70-77 ft-lbs	95.0-104.5 Nm	2.23 REAR FORK, Installation
Rear axle nut	95-105 ft-lbs	128.8-142.4 Nm	2.5 REAR WHEEL, Installation
Rear belt guard fastener	120-180 **in-lbs**	13.6-20.3 Nm	2.20 BELT GUARD AND DEBRIS DEFLECTOR, Belt Guard Installation
Rear caliper banjo bolt	17-22 ft-lbs	23.1-29.9 Nm	2.13 REAR BRAKE CALIPER, Installation
Rear fender cover front screw: all	12-18 ft-lbs	16.3-24.4 Nm	2.38 SAREE GUARD: INDIA MODELS, Replacement

FASTENER	TORQUE VALUE		NOTES
Rear fender cover rear screw: all	12-18 ft-lbs	16.3-24.4 Nm	2.38 SAREE GUARD: INDIA MODELS, Replacement
Rear fender screw: FLD	30-37 ft-lbs	40.7-50.2 Nm	2.29 REAR FENDER, FLD/Apply LOCTITE 243 MEDIUM STRENGTH THREADLOCKER AND SEALANT (blue).
Rear fender screw: FXDB, FXDBC, FXDBP	12-18 ft-lbs	16.3-24.4 Nm	2.29 REAR FENDER, FXDB, FXDBC, FXDBP
Rear fender screw: FXDF	12-18 ft-lbs	16.3-24.4 Nm	2.29 REAR FENDER, FXDF
Rear fender screw: FXDL	12-18 ft-lbs	16.3-24.4 Nm	2.29 REAR FENDER, FXDL
Rear fender screw: FXDWG	12-18 ft-lbs	16.3-24.4 Nm	2.29 REAR FENDER, FXDWG
Rear fork brake hose J-clip	40-60 **in-lbs**	4.5-6.8 Nm	2.14 BRAKE LINES, ABS Module to Rear Brake Caliper
Rear fork brake hose J-clip	40-60 **in-lbs**	4.5-6.8 Nm	2.23 REAR FORK, Assembly
Rear isolator mounting bolts to transmission case	22-27 ft-lbs	29.9-36.6 Nm	2.9 VEHICLE ALIGNMENT, Inspection
Rear isolator to frame bolts	22-27 ft-lbs	29.9-36.6 Nm	2.37 ENGINE MOUNTS, Installation
Rear master cylinder reservoir cover screws, non-ABS models	6-8 **in-lbs**	0.7-0.9 Nm	2.16 BLEEDING BRAKES, Procedure
Rear mount license plate bracket screws: FXDWG	30-40 **in-lbs**	3.4-4.5 Nm	2.29 REAR FENDER, FXDWG
Rear shock, lower screws: all	30-40 ft-lbs	40.7-54.2 Nm	2.38 SAREE GUARD: INDIA MODELS, Replacement
Rear sprocket screws-final torque	67-73 ft-lbs	90.9-99.0 Nm	2.5 REAR WHEEL, Assembly
Rear sprocket screws-initial torque	50 ft-lbs	67.8 Nm	2.5 REAR WHEEL, Assembly
Rider footboard bracket screws	32-37 ft-lbs	43-50 Nm	2.31 FOOTBOARDS AND FOOTRESTS, Rider Footboards
Rider footboard pivot bolt nut	60-80 **in-lbs**	6.8-9.0 Nm	2.31 FOOTBOARDS AND FOOTRESTS, Rider Footboards
Saddlebag inner/outer support screws: FLD	96-120 **in-lbs**	10.8-13.6 Nm	2.34 SADDLEBAGS: FLD, Saddlebag
Saddlebag latch attaching screws: FLD	14-20 **in-lbs**	1.6-2.3 Nm	2.34 SADDLEBAGS: FLD, Saddlebag
Saddlebag latch faceplate nut: FLD	7-17 **in-lbs**	0.8-1.9 Nm	2.34 SADDLEBAGS: FLD, Saddlebag Lid
Saddlebag latch faceplate screws: FLD	14-20 **in-lbs**	1.6-2.3 Nm	2.34 SADDLEBAGS: FLD, Saddlebag Lid
Saddlebag latch pivot screw: FLD	96-120 **in-lbs**	10.8-13.6 Nm	2.34 SADDLEBAGS: FLD, Saddlebag
Saddlebag latch screws: FLD	14-20 **in-lbs**	1.6-2.3 Nm	2.34 SADDLEBAGS: FLD, Saddlebag Lid
Saddlebag lock screws: FLD	30-40 **in-lbs**	3.4-4.5 Nm	2.34 SADDLEBAGS: FLD, Saddlebag Lid
Saddlebag lower mount screws: FLD	96-120 **in-lbs**	10.8-13.6 Nm	2.34 SADDLEBAGS: FLD, Saddlebag
Saddlebag lower mount spool: FLD	15-20 ft-lbs	20.3-27.1 Nm	2.29 REAR FENDER, FLD/Apply LOCTITE 243 MEDIUM STRENGTH THREADLOCKER AND SEALANT (blue).
Seat rear fastener: all	20-40 **in-lbs**	2.3-4.5 Nm	2.30 SEAT, Installation
Seat rear fastener: all	20-40 **in-lbs**	2.3-4.5 Nm	2.30 SEAT, Installation
Seat shoulder bolt: FXDWG	80-90 **in-lbs**	9.0-10.2 Nm	2.30 SEAT, Installation
Seat strap nut: FLD	60-90 **in-lbs**	6.8-10.2 Nm	2.29 REAR FENDER, FLD
Seat strap nut: FXDWG	60-90 **in-lbs**	6.8-10.2 Nm	2.30 SEAT, Installation
Shift rod fastener with acorn nut	96-144 **in-lbs**	10.8-16.2 Nm	2.31 FOOTBOARDS AND FOOTRESTS, Rider Footboards
Shock mounting fastener, lower	30-40 ft-lbs	40.7-54.2 Nm	2.5 REAR WHEEL, Installation/LOCTITE 243 MEDIUM STRENGTH THREADLOCKER AND SEALANT (blue)

FASTENER	TORQUE VALUE		NOTES
Shock mounting fastener, lower	30-40 ft-lbs	40.7-54.2 Nm	2.22 REAR SHOCK ABSORBERS, Installation/LOCTITE 243 MEDIUM STRENGTH THREADLOCKER AND SEALANT (blue)
Shock mounting fastener, upper	30-40 ft-lbs	40.7-54.2 Nm	2.5 REAR WHEEL, Installation/LOCTITE 243 MEDIUM STRENGTH THREADLOCKER AND SEALANT (blue)
Shock mounting fastener, upper	30-40 ft-lbs	40.7-54.2 Nm	2.22 REAR SHOCK ABSORBERS, Installation/LOCTITE 243 MEDIUM STRENGTH THREADLOCKER AND SEALANT (blue)
Shock mounting stud nut, inner	75-85 ft-lbs	101.7-115.2 Nm	2.22 REAR SHOCK ABSORBERS, Installation
Side mount license plate bracket screws: FXDWG	84-180 **in-lbs**	9.5-20.3 Nm	2.29 REAR FENDER, FXDWG
Slider cover fasteners: FLD	84-120 **in-lbs**	9.5-13.5 Nm	2.32 HEADLAMP NACELLE: FLD, Upper and Lower Nacelle
Spoke nipple	55 **in-lbs**	6.2 Nm	2.8 CHECKING AND TRUING WHEELS, True Laced Wheels
Tether assembly screws: FLD	8-12 **in-lbs**	0.9-1.4 Nm	2.34 SADDLEBAGS: FLD, Saddlebag Lid
Top brake caliper mounting bolt, front	28-38 ft-lbs	38.0-51.5 Nm	2.4 FRONT WHEEL, Installation
Upper and lower pinch bolts: FLD	30-35 ft-lbs	40.7-47.5 Nm	2.19 STEERING HEAD, Installation: FLD
Upper handlebar clamp fastener, front: all	12-16 ft-lbs	16.3-21.7 Nm	2.25 HANDLEBAR: FLD, Installation
Upper handlebar clamp fastener, rear: all	12-16 ft-lbs	16.3-21.7 Nm	2.25 HANDLEBAR: FLD, Installation
Upper handlebar clamp fastener: FXDB, FXDBC, FXDBP, FXDF, FXDWG, final tightening	12-16 ft-lbs	16.3-21.7 Nm	2.26 HANDLEBAR: FXDB, FXDBC, FXDBP, FXDF AND FXDWG, Installation
Upper handlebar clamp fastener: FXDB, FXDBC, FXDBP, initial tightening	12-16 ft-lbs	16.3-21.7 Nm	2.26 HANDLEBAR: FXDB, FXDBC, FXDBP, FXDF AND FXDWG, Installation
Upper handlebar clamp fastener: FXDB, FXDBC, FXDBP final tightening	12-16 ft-lbs	16.3-21.7 Nm	2.26 HANDLEBAR: FXDB, FXDBC, FXDBP, FXDF AND FXDWG, Installation
Upper nacelle fasteners: FLD	84-120 **in-lbs**	9.5-13.5 Nm	2.19 STEERING HEAD, Installation: FLD
Upper nacelle fasteners: FLD	84-120 **in-lbs**	9.5-13.5 Nm	2.32 HEADLAMP NACELLE: FLD, Upper and Lower Nacelle
Valve stem nut	12-15 **in-lbs**	1.4-1.7 Nm	2.17 TIRES, Installation
Valve stem nut, tube type	3-7 **in-lbs**	0.3-0.8 Nm	2.17 TIRES, Installation
Windshield docking hardware: FLD	84-120 **in-lbs**	9.5-13.5 Nm	2.19 STEERING HEAD, Installation: FLD
Windshield docking hardware: FLD	84-120 **in-lbs**	9.5-13.5 Nm	2.32 HEADLAMP NACELLE: FLD, Upper and Lower Nacelle
Windshield window screws: FLD	20-25 **in-lbs**	2.3-2.8 Nm	2.33 WINDSHIELD: FLD, Windshield Window

SPECIFICATIONS

Chassis Specifications

Table 2-1. Dimensions

ITEM	FXDB, FXDBC*, FXDBP*		FXDF		FXDWG		FLD		FXDL	
	in	mm	in	mm	in	mm	in	mm	in	mm
Length	94.3	2395	94.5	2400	96.3	2445	92.9	2360	92.3	2345
Overall width	36	915	35.0	890	35.2	895	36.6	930	35.6	905
Overall height	48.8	1240	44.7	1135	44.7	1135	54.5	1385	46.6	1185
Wheelbase	64.2	1630	63.8	1620	67.5	1715	62.8	1595	64.2	1630
Road clearance	4.7	120	4.9	125	3.9	100	4.3	110	4.1	105
Seat height**	25.5	648	26.1	663	25.5	648	26.1	663	25.4	660

*Specifications may vary for factory customized vehicles.
**With 180 lb (81.6 kg) rider on seat.

Table 2-2. Capacities

ITEM	FXDB, FXDBC, FXDBP, FLD, FXDWG, FXDL		FXDF	
	U.S.	METRIC	U.S.	METRIC
Fuel tank (total)	4.7 gal	17.8 L	5.0 gal	18.9 L
Oil tank with filter	3.0 qt	2.8 L	3.0 qt	2.8 L
Transmission (approximate)	1.0 qt	0.95 L	1.0 qt	0.95 L
Primary chaincase (approximate)	1.0 qt	0.95 L	1.0 qt	0.95 L
Low fuel warning light on	0.9 gal	3.4 L	0.9 gal	3.4 L

Table 2-3. Weight

ITEM	FXDB, FXDBC*, FXDBP*		FXDF		FXDWG		FLD		FXDL	
	lb	kg	lb	kg	lb	kg	lb	kg	lb	kg
Running weight**	670	304	706	320	683	310	718	326	666	302
Maximum added weight allowed***	415	188	379	172	402	182	452	205	419	190
GVWR	1085	492	1085	492	1085	492	1170	530	1085	492
GAWR front	390	177	390	177	390	177	455	206	390	177
GAWR rear	695	315	695	315	695	315	794	360	695	315

*Specifications may vary for factory customized vehicles.
**The total weight as delivered with all oil/fluids and approximately 90% of fuel.
***The total weight of accessories, cargo, riding gear, passenger and rider must not exceed this weight.

⚠WARNING

Do not exceed the motorcycle's Gross Vehicle Weight Rating (GVWR) or Gross Axle Weight Rating (GAWR). Exceeding these weight ratings can lead to component failure and adversely affect stability, handling and performance, which could result in death or serious injury. (00016f)

- GVWR is the sum of the weight of the motorcycle, accessories, and the maximum weight of the rider, passenger and cargo that can be safely carried.
- GAWR is the maximum amount of weight that can be safely carried on each axle.
- The GVWR and GAWR are shown on the information plate, located on the frame down tube.

NOTES

- *The maximum additional weight allowed on the motorcycle equals the Gross Vehicle Weight Rating (GVWR) minus the running weight. For example, a motorcycle with GVWR of 1200 lbs (544 kg) having a running weight of 800 lbs (363 kg), would allow a maximum of an additional 400 lbs (181 kg) combined weight of the rider, passenger, riding gear, cargo and installed accessories.*
- *For important information regarding tire data and tire inflation, see 1.7 TIRES AND WHEELS.*

Tire Specifications

⚠WARNING

Use only Harley-Davidson specified tires. See a Harley-Davidson dealer. Using non-specified tires can adversely affect stability, handling or braking, which could result in death or serious injury. (00024b)

NOTES

- *ABS equipped motorcycles must always use tires and wheels that are the same as the original equipment. ABS monitors rotational speed of the wheels through individual wheel speed sensors to determine the application of ABS. Changing to different diameter wheels or different size tires can alter the rotational speed. This will upset the system calibration and have an adverse effect on its ability to detect and prevent lockups.*
- *Operating with inflation pressure other than those specified in Table 2-7 can reduce ABS performance.*

Tire sizes are molded on the sidewall. Refer to the tire fitment tables below. Rim size and contour are cast or stamped into the exterior surface of the rim.

Example: T19 x 2.15 MT DOT. "T" indicates that the rim conforms to Tire and Rim Association standards. The "19" is the normal diameter of the rim in inches, measured at the bead seat diameter. The "2.15" is the width of the bead seat measured in inches. "MT" designates the rim contour. "DOT" means that the rim meets Department of Transportation Federal Motor Vehicle Safety Standards.

Table 2-4. Tire Fitment-Tubeless Cast Wheels

WHEEL SIZE & POSITION	RIM SIZE & CONTOUR	RIM VALVE HOLE DIA.	TIRE SIZE
16 in - Front	E16 x 3.00 MT	0.327 in	Dunlop D427F 130/90B16 67H
18 in - Front	T18 x 3.5 MT	0.45 in	Dunlop D402F 130/70B18
19 in - Front	T19 x 2.5 MT	0.327 in	Michelin Scorcher "31" 100/90-19
16 in - Rear	T16 x 5.0 MT	0.333 in	Dunlop D427 180/70B16 77H
17 in - Rear	T17 x 4.5 MT	0.327 in	Michelin Scorcher "31" 160/70-17
17 in - Rear	T17 x 4.5 MT	0.327 in	Dunlop D401 160/70B17

Table 2-5. Tire Fitment-Tube Type Steel-Laced Wheels

WHEEL SIZE & POSITION	RIM SIZE & CONTOUR	TUBE SIZE CENTER VALVE TUBE	TIRE SIZE
19 in - Front	T19 x 2.50 TLA	MJ/MM90-19 or 100/90-19	Michelin Scorcher "31" 100/90-19
21 in - Front	T21 x 2.15 TLA	MH90-21 80/90-21	Michelin Scorcher "31" 80/90-21

Table 2-5. Tire Fitment-Tube Type Steel-Laced Wheels

WHEEL SIZE & POSITION	RIM SIZE & CONTOUR	TUBE SIZE CENTER VALVE TUBE	TIRE SIZE
17 in - Rear (all but FXDWG)	T17 x 4.5 MT	150-160/70-17 or 160/70-17	Michelin Scorcher "31" 160/70-17
17 in - Rear (FXDWG)	T17 x 4.5 MT	180/60B17	Michelin Scorcher "31" 180/60-17

Table 2-6. Tire Fitment - Tube Type Chrome Aluminum Profile Laced Wheels

WHEEL SIZE & POSITION	RIM SIZE & CONTOUR	TUBE SIZE CENTER VALVE TUBE	TIRE SIZE
19 in - Front	T19 x 2.50 MT	MJ/MM90-19 or 100/90-19	Michelin Scorcher "31" 100/90-19
17 in - Rear	T17 x 4.5 MT	150-160/70-17	Michelin Scorcher "31" 160/70-17

Table 2-7. Specified Tires

MODEL	MOUNT	SIZE	SPECIFIED TIRE	PRESSURE (COLD)	
		in		psi	kPa
FXDB, FXDBC, FXDBP, FXDL	Front	19	Michelin Scorcher "31" 100/90B19	30	206
	Rear	17	Michelin Scorcher "31" 160/70B17	40	276
FXDF	Front	16	Dunlop D427F 130/90B16	36	248
	Rear	16	Dunlop D427 180/70B16	40	276
FXDWG	Front	21	Michelin Scorcher "31" 80/90-21	38	262
	Rear	17	Michelin Scorcher "31" 180/60B17	40	276
FLD	Front	18	Dunlop D402F 130/70B18	36	248
	Rear	17	Dunlop D401 160/70B17	40	276

VEHICLE IDENTIFICATION NUMBER

See Figure 2-1. The full 17 digit serial or Vehicle Identification Number (VIN) is stamped on the steering head. In some destinations, a printed VIN label is also affixed to the right front frame downtube.

An abbreviated VIN is stamped on the left side crankcase at the base of the rear cylinder.

NOTE

Always give the full 17-digit Vehicle Identification Number when ordering parts or making any inquiry about your motorcycle.

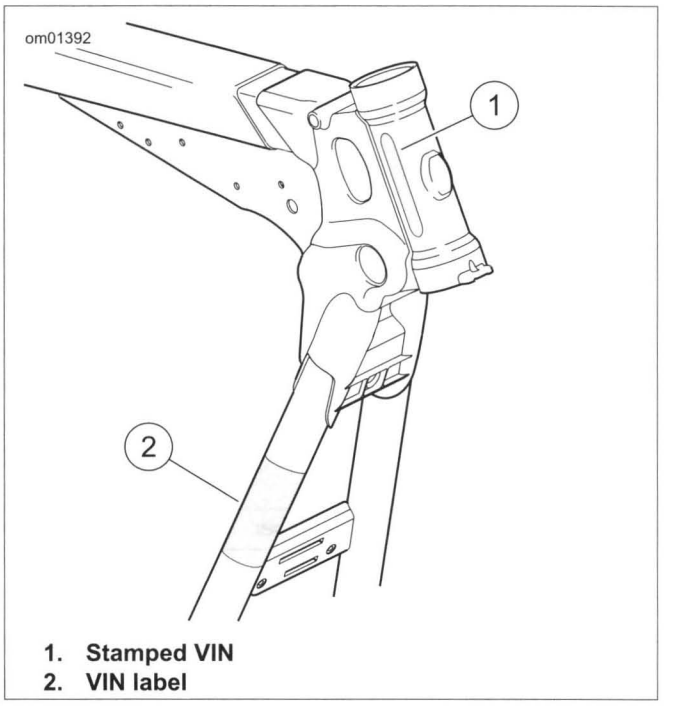

1. **Stamped VIN**
2. **VIN label**

Figure 2-1. VIN Locations

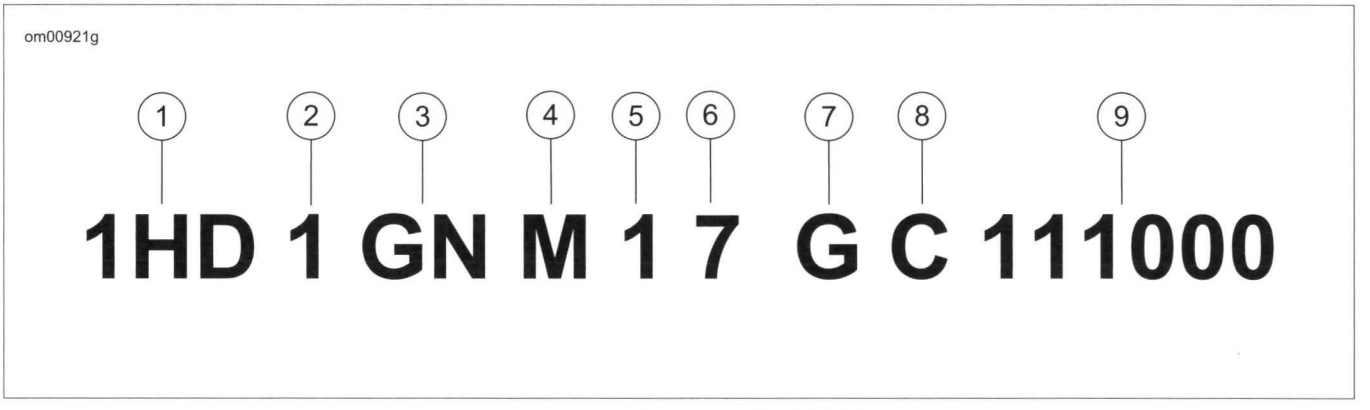

Figure 2-2. Typical Harley-Davidson VIN: 2016 Dyna Models

Table 2-8. Harley-Davidson VIN Breakdown: 2016 Dyna Models

POSITION	DESCRIPTION	POSSIBLE VALUES
1	World manufacturer identifier	1HD=Originally manufactured in the United States 5HD=Originally manufactured in the United States for sale outside of the United States 932=Originally manufactured in Brazil MEG=Originally manufactured in India
2	Motorcycle type	1=Heavyweight motorcycle (901 cm^3 or larger)
3	Model	See VIN model table
4	Engine type	4=Twin Cam 96™, 1585 cm^3 air-cooled, fuel-injected M=Twin Cam 103™, 1690 cm^3 air-cooled, fuel-injected

Table 2-8. Harley-Davidson VIN Breakdown: 2016 Dyna Models

POSITION	DESCRIPTION	POSSIBLE VALUES	
5	Calibration/configuration, introduction	**Normal Introduction** 1=Domestic (DOM) 3=California (CAL) A=Canada (CAN) C=HDI E=Japan (JPN) G=Australia (AUS) J=Brazil (BRZ) L=Asia Pacific (APC) N=India (IND)	**Mid-year or Special Introduction** 2, 4=Domestic (DOM) 5, 6=California (CAL) B=Canada (CAN) D=HDI F=Japan (JPN) H=Australia (AUS) K=Brazil (BRZ) M=Asia Pacific (APC) P=India (IND)
6	VIN check digit	Can be 0-9 or X	
7	Model year	G=2016	
8	Assembly plant	C=Kansas City, MO U.S.A. D=H-D Brazil-Manaus, Brazil (CKD) N=Haryana India (Bawal District Rewari)	
9	Sequential number	Varies	

Table 2-9. VIN Model Codes: 2016 Dyna Models

CODE	MODEL	CODE	MODEL
GN	FXDL Dyna® Low Rider®	GZ	FLD Dyna® Switchback™
GP	FXDWG Dyna® Wide Glide®	VA	FXDBP Dyna® Street Bob® (factory custom)
GX	FXDB Dyna® Street Bob®	VD	FXDBC Dyna® Street Bob® Limited
GY	FXDF Dyna® Fat Bob®		

REMOVAL

1. Raise the front end of the motorcycle.
2. Inspect wheel bearing end play. Service bearings if necessary. See 2.6 SEALED WHEEL BEARINGS.
3. See Figure 2-3. Remove mounting bolts (1, 2). Remove brake caliper. Support caliper using a rubber bungee cord.

NOTE

Do not operate front brake lever with the front wheel removed or the caliper piston can be forced out of piston bore. Reseating the piston requires disassembly of the caliper.

4. Remove axle nut and washer (3).
5. See Figure 2-4 or Figure 2-5. Loosen the slider cap screws and washers (2) or pinch bolt (2). Pull the axle (1) free.
6. Remove wheel from forks.

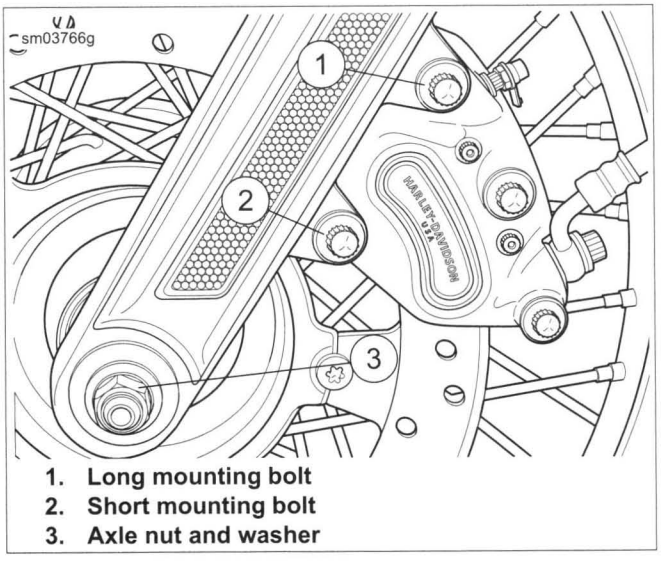

1. **Long mounting bolt**
2. **Short mounting bolt**
3. **Axle nut and washer**

Figure 2-3. Front Caliper and Axle Mounting (Left Side)

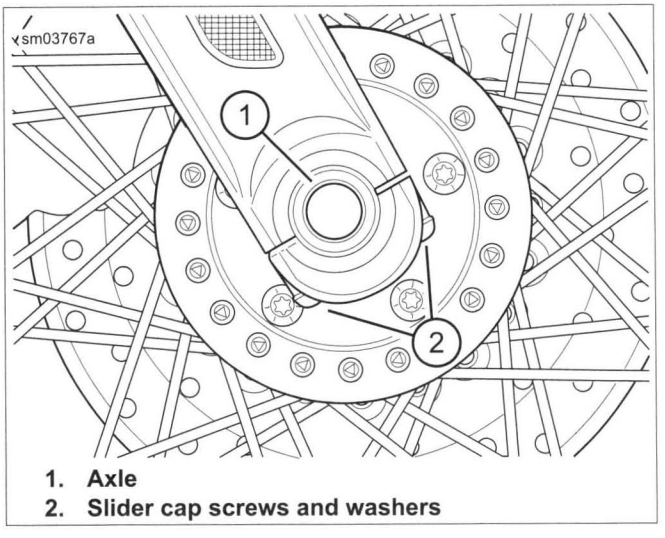

1. **Axle**
2. **Slider cap screws and washers**

Figure 2-4. Front Wheel Mounting: All but FLD (Right Side)

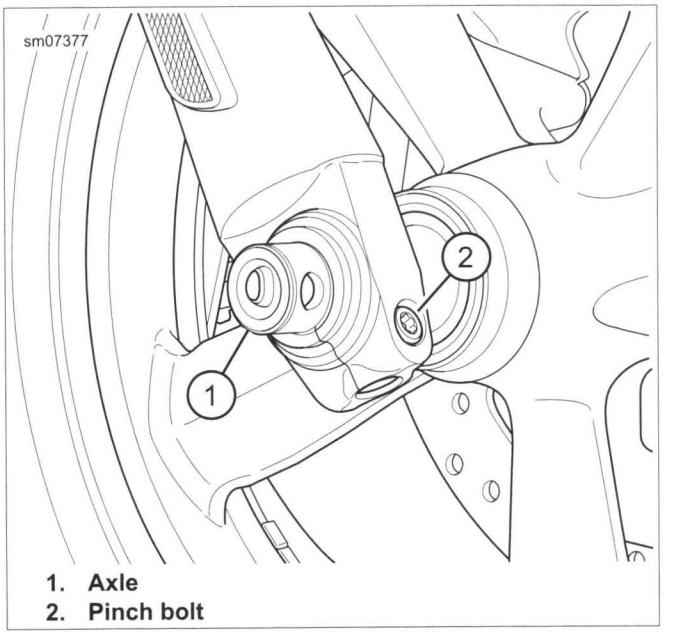

1. **Axle**
2. **Pinch bolt**

Figure 2-5. Front Wheel Mounting: FLD (Right Side)

DISASSEMBLY

NOTES

- *To service tire or valve stem assembly, see 2.17 TIRES.*
- *If motorcycle has ABS brakes, see 2.15 ABS MODULE (EHCU).*
- *Cast wheels do not use hub caps no matter the model.*

Cast Wheel

1. See Figure 2-6. Remove right spacer (2) and left spacer (10) or wheel speed sensor (13).
2. If necessary, remove brake disc (6). On left side of wheel, remove five screws (15) to detach brake disc (6). Discard screws.

Cast Wheel, Dual Brakes

1. See Figure 2-7. Remove right spacer (2) and left spacer (10) or wheel speed sensor (13).
2. If necessary, remove brake discs. Remove five screws (15) to detach each brake disc. Discard screws.

Laced Wheel

1. See Figure 2-8. Remove right bearing spacer (2) and left bearing spacer (10) or wheel speed sensor (13). If necessary, remove brake disc(s).
2. See Figure 2-9. On left side of wheel, remove five screws (15) to detach brake disc (6). Discard screws.

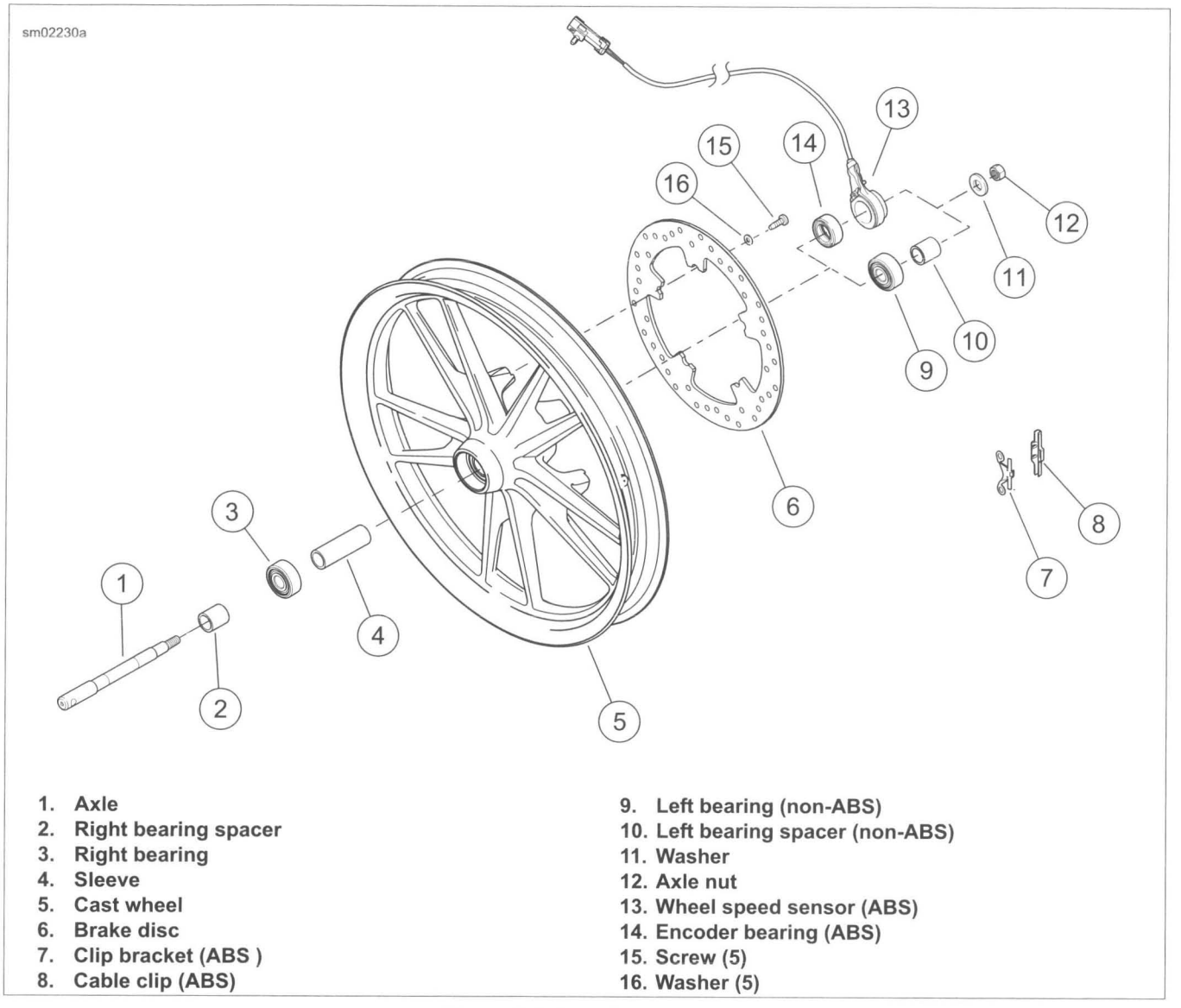

1. Axle
2. Right bearing spacer
3. Right bearing
4. Sleeve
5. Cast wheel
6. Brake disc
7. Clip bracket (ABS)
8. Cable clip (ABS)
9. Left bearing (non-ABS)
10. Left bearing spacer (non-ABS)
11. Washer
12. Axle nut
13. Wheel speed sensor (ABS)
14. Encoder bearing (ABS)
15. Screw (5)
16. Washer (5)

Figure 2-6. Cast Front Wheel

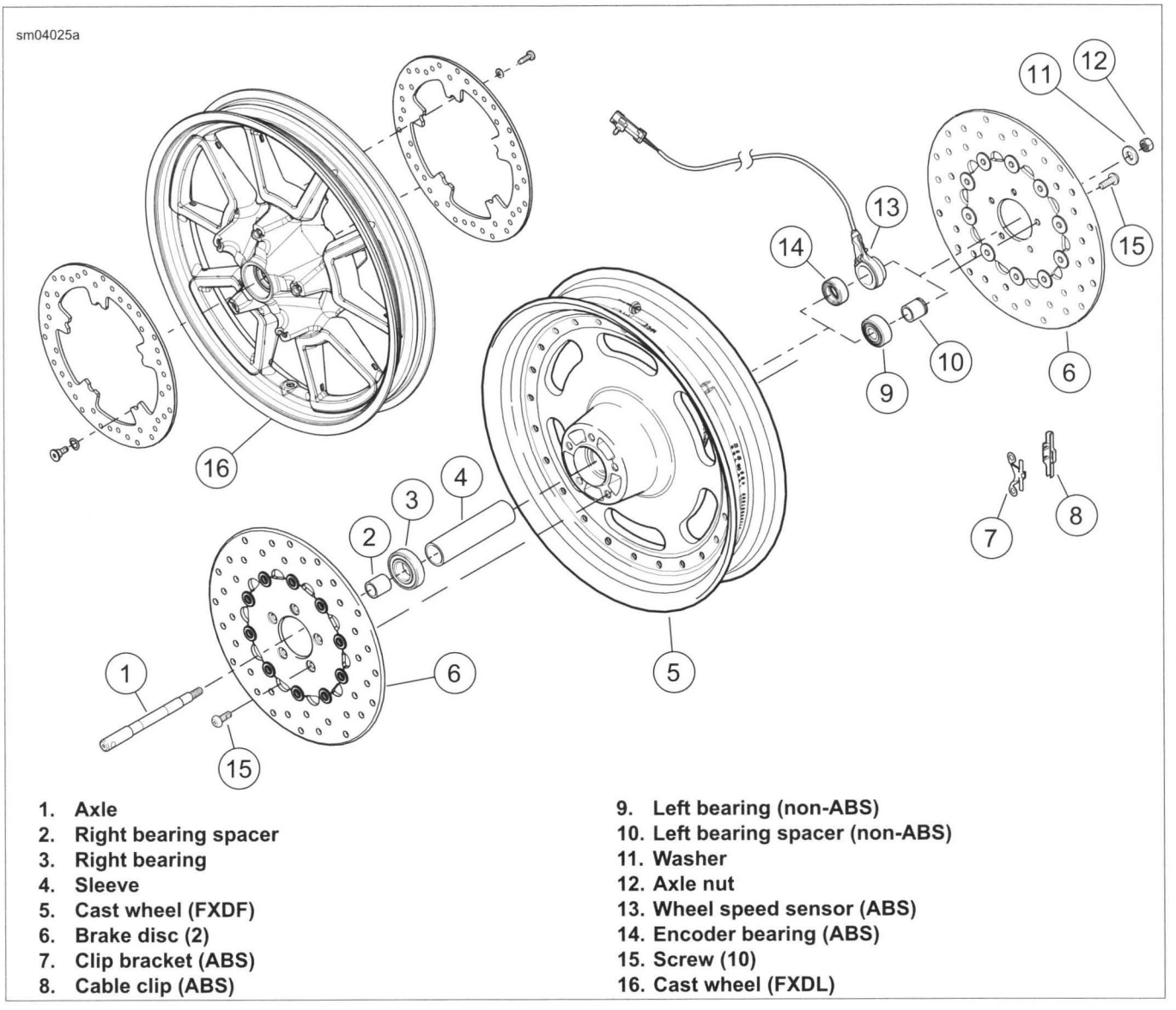

1. Axle
2. Right bearing spacer
3. Right bearing
4. Sleeve
5. Cast wheel (FXDF)
6. Brake disc (2)
7. Clip bracket (ABS)
8. Cable clip (ABS)
9. Left bearing (non-ABS)
10. Left bearing spacer (non-ABS)
11. Washer
12. Axle nut
13. Wheel speed sensor (ABS)
14. Encoder bearing (ABS)
15. Screw (10)
16. Cast wheel (FXDL)

Figure 2-7. Cast Front Wheel (FXDF, FXDL)

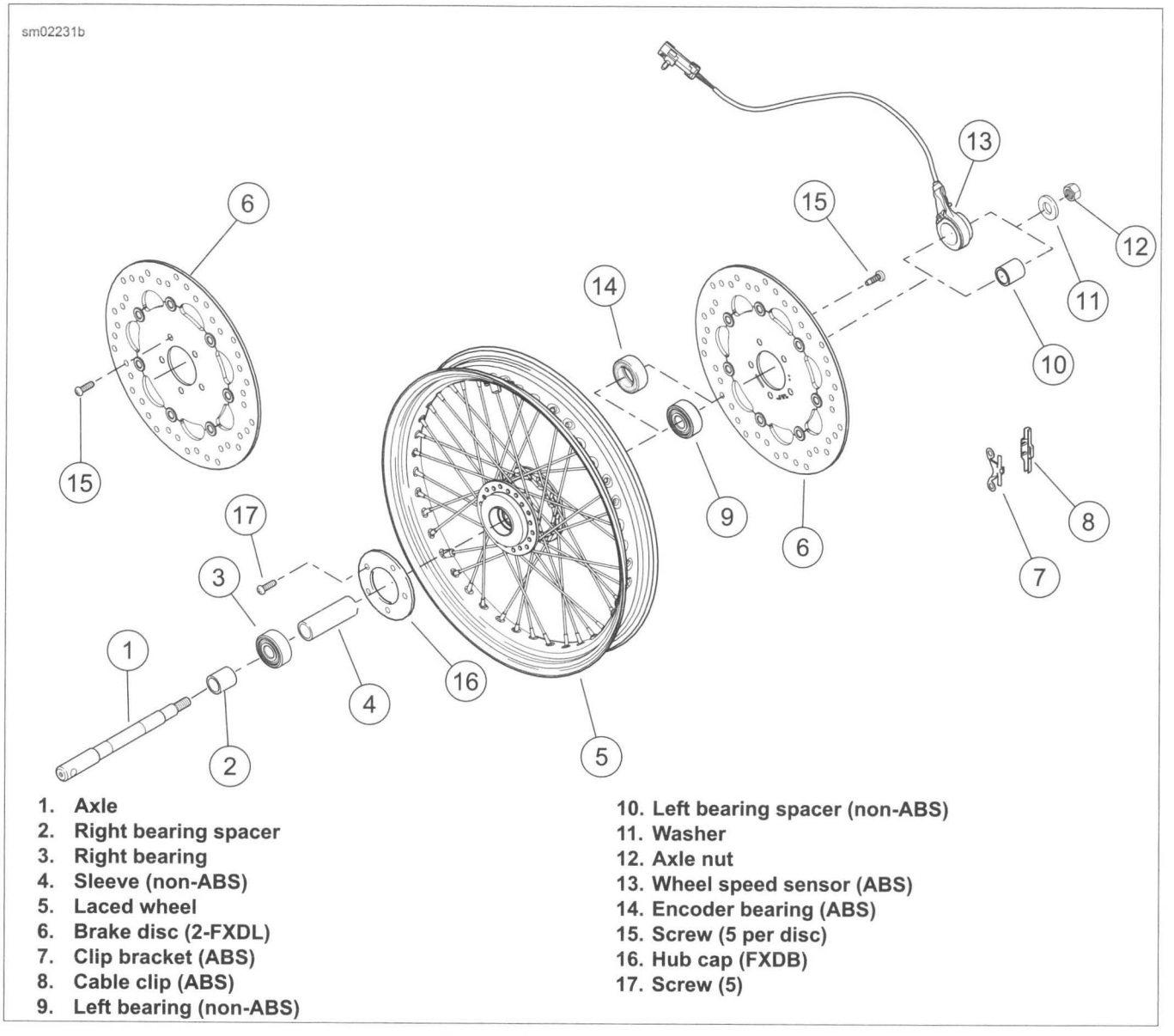

1. Axle
2. Right bearing spacer
3. Right bearing
4. Sleeve (non-ABS)
5. Laced wheel
6. Brake disc (2-FXDL)
7. Clip bracket (ABS)
8. Cable clip (ABS)
9. Left bearing (non-ABS)
10. Left bearing spacer (non-ABS)
11. Washer
12. Axle nut
13. Wheel speed sensor (ABS)
14. Encoder bearing (ABS)
15. Screw (5 per disc)
16. Hub cap (FXDB)
17. Screw (5)

Figure 2-8. Laced Front Wheel

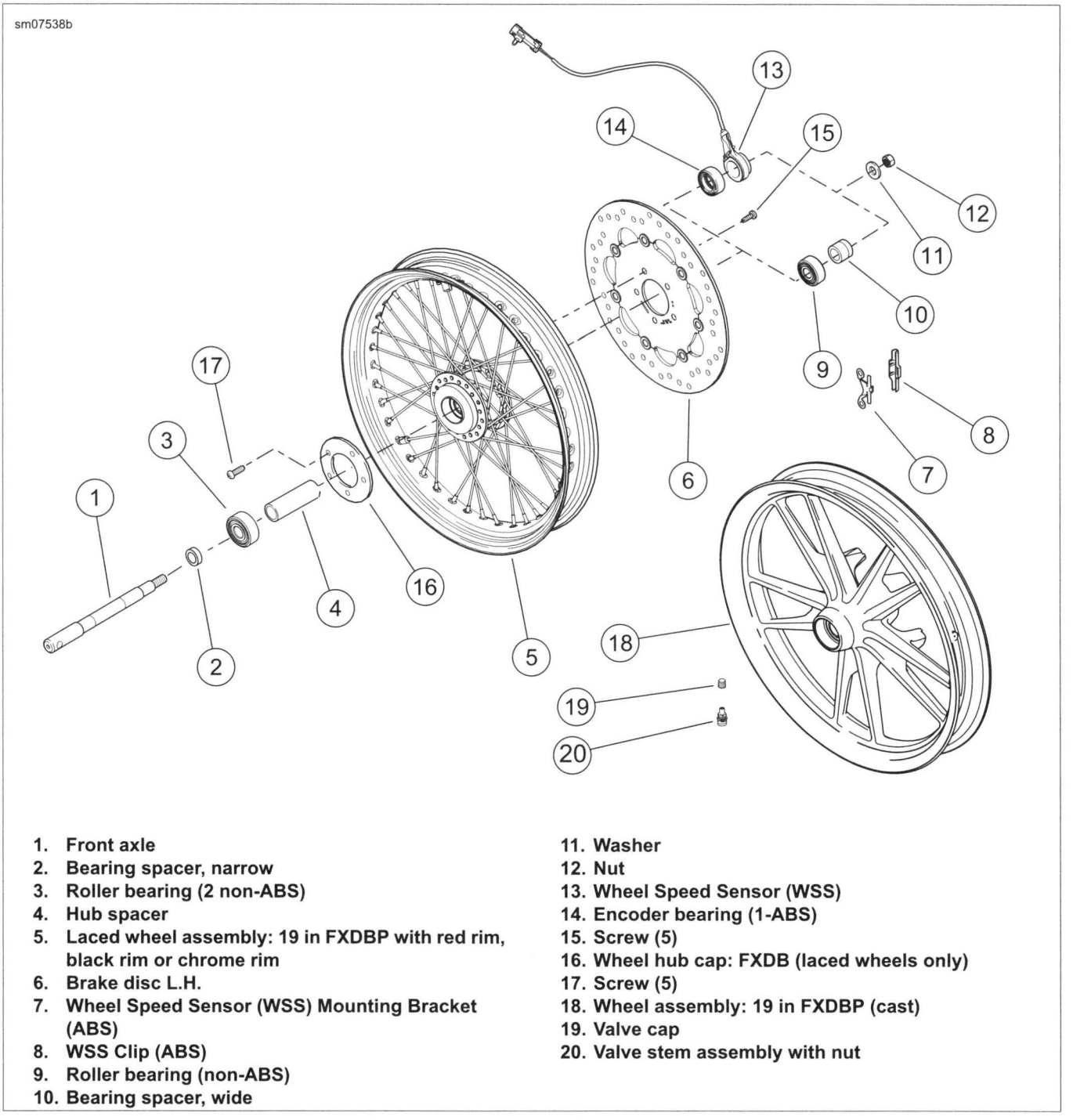

1. **Front axle**
2. **Bearing spacer, narrow**
3. **Roller bearing (2 non-ABS)**
4. **Hub spacer**
5. **Laced wheel assembly: 19 in FXDBP with red rim, black rim or chrome rim**
6. **Brake disc L.H.**
7. **Wheel Speed Sensor (WSS) Mounting Bracket (ABS)**
8. **WSS Clip (ABS)**
9. **Roller bearing (non-ABS)**
10. **Bearing spacer, wide**
11. **Washer**
12. **Nut**
13. **Wheel Speed Sensor (WSS)**
14. **Encoder bearing (1-ABS)**
15. **Screw (5)**
16. **Wheel hub cap: FXDB (laced wheels only)**
17. **Screw (5)**
18. **Wheel assembly: 19 in FXDBP (cast)**
19. **Valve cap**
20. **Valve stem assembly with nut**

Figure 2-9. FXDBP Front Wheel Options

CLEANING AND INSPECTION

1. Inspect all parts for damage or excessive wear.
2. Inspect brake disc and pads. See 1.15 BRAKE PADS AND DISCS.

ASSEMBLY

FASTENER	TORQUE VALUE	
Brake disc screws: front wheel	16-24 ft-lbs	21.7-32.5 Nm
Brake disc screws: front wheel	16-24 ft-lbs	21.7-32.5 Nm
Brake disc screws: front wheel	16-24 ft-lbs	21.7-32.5 Nm
Brake disc screws: front wheel	16-24 ft-lbs	21.7-32.5 Nm

⚠WARNING

Be sure that brake fluid or other lubricants do not contact brake pads or discs. Such contact can adversely affect braking ability, which could cause loss of control, resulting in death or serious injury. (00290a)

Cast Wheel

1. See Figure 2-6. If necessary, install brake disc (6). Verify that brake disc is clean.
2. On left side of wheel, install five **new** screws (15) and washers (16) to attach brake disc (6). Tighten to 16-24 ft-lbs (21.7-32.5 Nm).
3. **FXDF and FXDL:** Install second disc on right side of wheel. Tighten to 16-24 ft-lbs (21.7-32.5 Nm).
4. Install right bearing spacer (2) and wheel speed sensor (13) or left bearing spacer (10) with largest chamfered end facing away from wheel.
5. Verify that wheel and tire are true. See 2.8 CHECKING AND TRUING WHEELS.

Laced Wheel

1. If hub and rim were disassembled, see 2.7 WHEEL LACING.
2. See Figure 2-8. If necessary, install brake disc (6). Verify that brake disc is clean.
3. On left side of wheel, install **new** screws (15) to attach brake disc (6). Tighten to 16-24 ft-lbs (21.7-32.5 Nm).
4. **FXDL:** Install second disc on right side of wheel. Tighten to 16-24 ft-lbs (21.7-32.5 Nm).
5. Install right bearing spacer (2) and wheel speed sensor (13) or left bearing spacer (10) with largest chamfered end facing away from wheel.
6. Verify that wheel and tire are true. See 2.8 CHECKING AND TRUING WHEELS.

INSTALLATION

FASTENER	TORQUE VALUE	
Axle nut, front	70-75 ft-lbs	95.0-101.6 Nm
Axle cap fastener, rear: all but FLD	132-180 **in-lbs**	14.9-20.3 Nm
Axle cap fastener, front: all but FLD	132-180 **in-lbs**	14.9-20.3 Nm
Axle pinch bolt, front: FLD	18-22 ft-lbs	24.4-29.9 Nm
Bottom brake caliper mounting bolt, front	28-38 ft-lbs	38.0-51.5 Nm
Top brake caliper mounting bolt, front	28-38 ft-lbs	38.0-51.5 Nm

1. Apply a light coat of ANTI-SEIZE LUBRICANT to axle, bearing bores and spacer sleeve bore.

NOTE

***ABS models:** the WSS is on the left side of the vehicle.*

2. See Figure 2-10. Place wheel into front fork. Install axle. Verify that axle spacers (1) on right and left side are properly installed.
3. See Figure 2-11. Install slider cap with cast-in spacer (1) toward the rear of the vehicle on all models except FLD. Leave fasteners loose.
4. **ABS models:** See Figure 2-13. Rotate front wheel speed sensor counterclockwise until index pin contacts shoulder on left fork slider.
5. Install the washer, lockwasher and axle nut. While holding axle stationary with a steel rod or screwdriver inserted through hole on right end of axle, tighten axle nut to 70-75 ft-lbs (95.0-101.6 Nm).

NOTE

If the axle cap fasteners are properly tightened, there will be no gap at the rear of the axle cap.

6. Secure axle to front fork in the following manner:
   a. **All but FLD:** See Figure 2-11. Tighten rear axle cap fastener (2) to 132-180 **in-lbs** (14.9-20.3 Nm). Then tighten front axle cap fastener (3) to 132-180 **in-lbs** (14.9-20.3 Nm).
   b. **FLD:** See Figure 2-12. Tighten front axle pinch bolt to 18-22 ft-lbs (24.4-29.9 Nm).

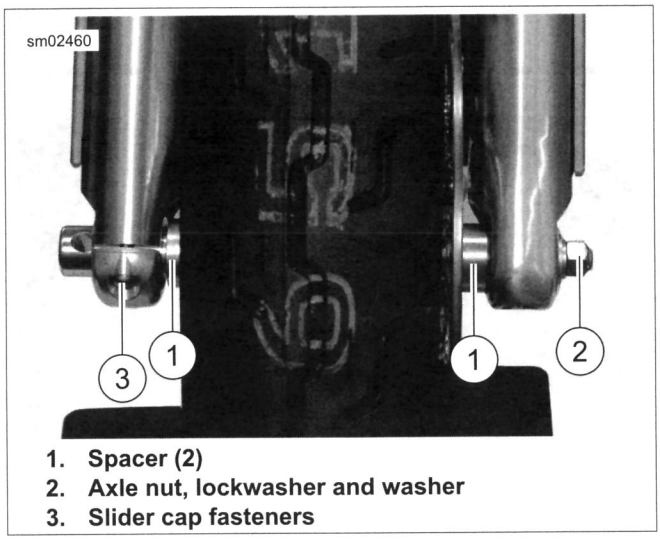

1. **Spacer (2)**
2. **Axle nut, lockwasher and washer**
3. **Slider cap fasteners**

Figure 2-10. Front Axle Assembly

7. See Figure 2-3. Install the brake caliper to the fork leg.
   a. Loosely install long mounting bolt (1) (metric) into top hole on fork leg.
   b. Install short mounting bolt (2) (metric) into bottom hole on fork leg. Tighten bottom mounting bolt to 28-38 ft-lbs (38.0-51.5 Nm).
   c. Final tighten the top mounting bolt to 28-38 ft-lbs (38.0-51.5 Nm).
8. **Dual caliper vehicles:** Repeat steps for the opposite side.

⚠WARNING

Whenever a wheel is installed and before moving the motorcycle, pump brakes to build brake system pressure. Insufficient pressure can adversely affect brake performance, which could result in death or serious injury. (00284a)

9. Pump brakes to move pistons out until brake pads contact rotor. Verify piston location against pads.

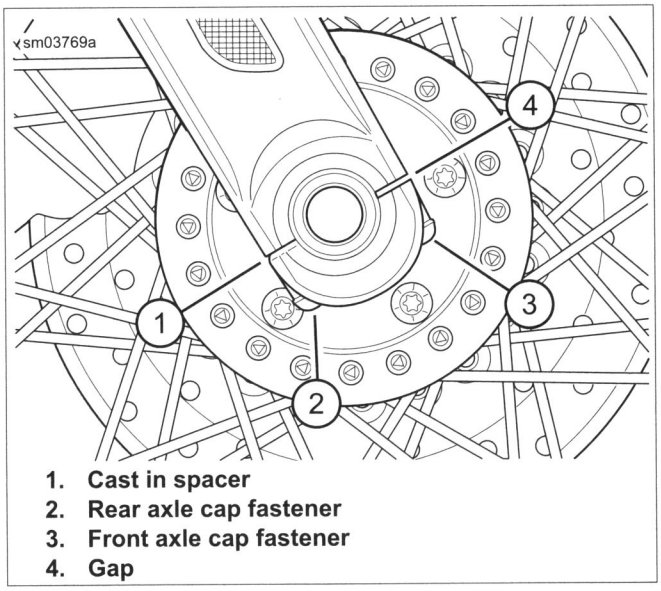

1. **Cast in spacer**
2. **Rear axle cap fastener**
3. **Front axle cap fastener**
4. **Gap**

Figure 2-11. Axle Cap Installation

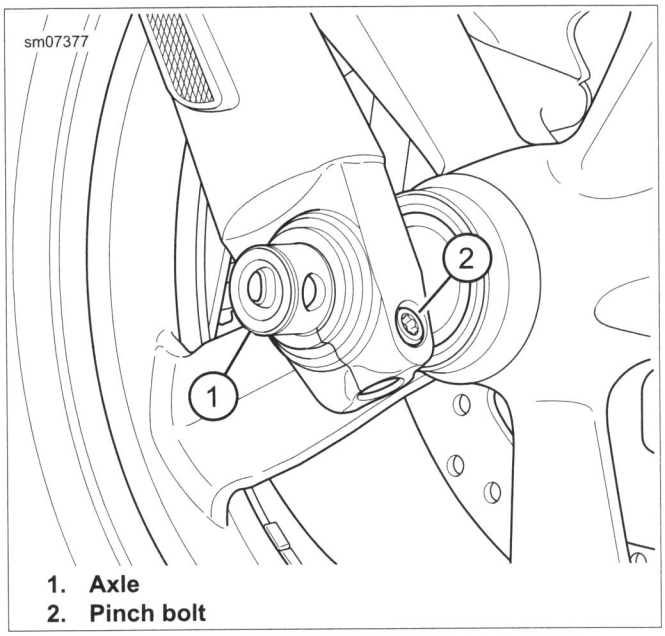

1. **Axle**
2. **Pinch bolt**

Figure 2-12. Front Wheel Mounting: FLD (Right Side)

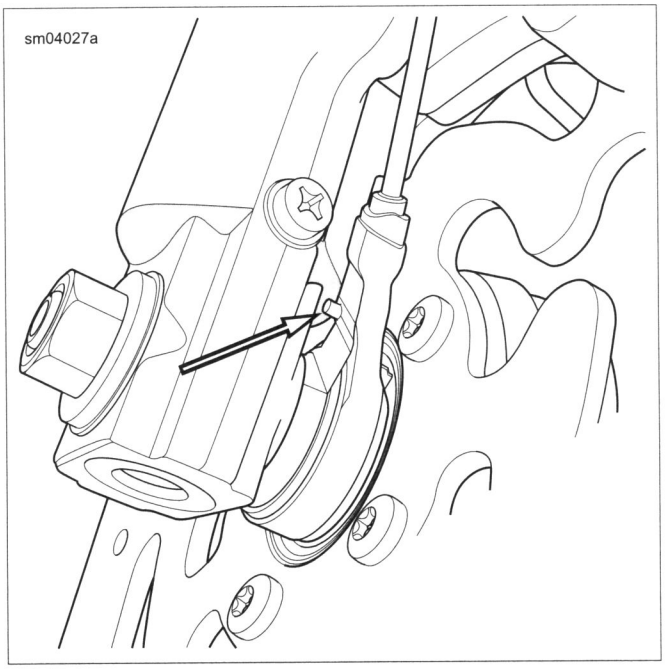

Figure 2-13. Front Wheel Speed Sensor Index Pin (ABS Models)

REMOVAL

NOTE

***Do not** remove sprocket or brake disc unless they are damaged and must be replaced.*

1. Raise the rear of the motorcycle.
2. Remove three screws to detach the debris deflector from rear fork. See 2.20 BELT GUARD AND DEBRIS DEFLECTOR.
3. Inspect wheel bearing end play and service bearings if necessary. See 2.6 SEALED WHEEL BEARINGS.
4. See Figure 2-14. Remove retaining ring (3), axle nut (2), and washer from left side of axle.
5. Loosen adjuster on each side several turns to remove belt tension.
6. See Figure 2-15. Loosen, but do not remove, left and right upper mounting nuts (1).
7. Remove left and right lower shock mounting screws (2).
8. Raise rear fork and reposition shocks to clear rear fork mounts. (Rear fork must be raised to allow axle to clear muffler when removed.)
9. Remove belt guard. See 2.20 BELT GUARD AND DEBRIS DEFLECTOR.

NOTE

Caliper to rear wheel clearance is minimal. To prevent damage to surfaces, be careful when removing caliper from rear fork.

10. Remove caliper assembly from caliper mount. Support caliper with an elastic cord. See 2.13 REAR BRAKE CALIPER.
11. Remove axle from wheel.
12. Move wheel forward and remove belt.
13. Pull wheel and belt sprocket from rear fork.

NOTE

Do not operate rear brake pedal with the rear wheel removed or the caliper piston can be forced out of piston bores. Reseating the piston requires disassembly of the caliper.

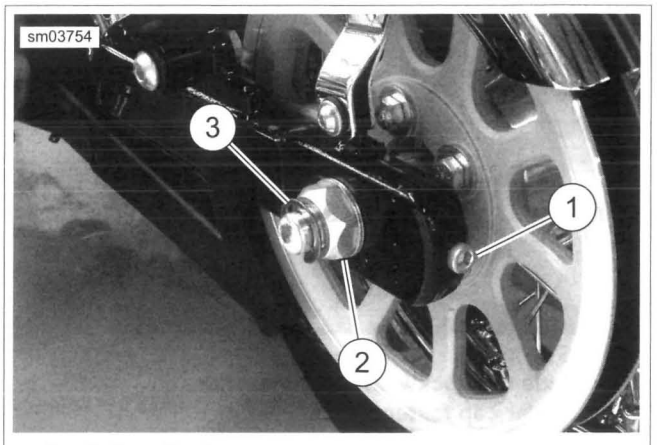

1. **Axle adjuster**
2. **Axle nut**
3. **Retaining ring**

Figure 2-14. Axle Adjusters (Left Side Shown)

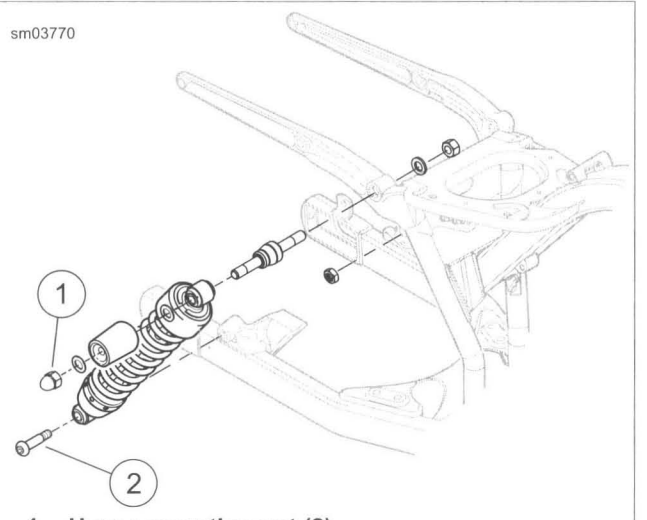

1. **Upper mounting nut (2)**
2. **Lower mounting screw (2)**

Figure 2-15. Rear Shock Mount

DISASSEMBLY

NOTE

Except for the sprocket cover, component parts for cast and laced rear wheels are identical.

1. See Figure 2-16. Remove right bearing spacer (2) and left bearing spacer (10) or wheel speed sensor (17).
2. If necessary, remove brake disc and/or rear sprocket.
   a. On left side of wheel, remove five screws (14) and washers (15) to detach rear sprocket (9). Discard screws.
   b. On right side of wheel, remove five screws (3) to remove rear brake disc (4). Discard screws.

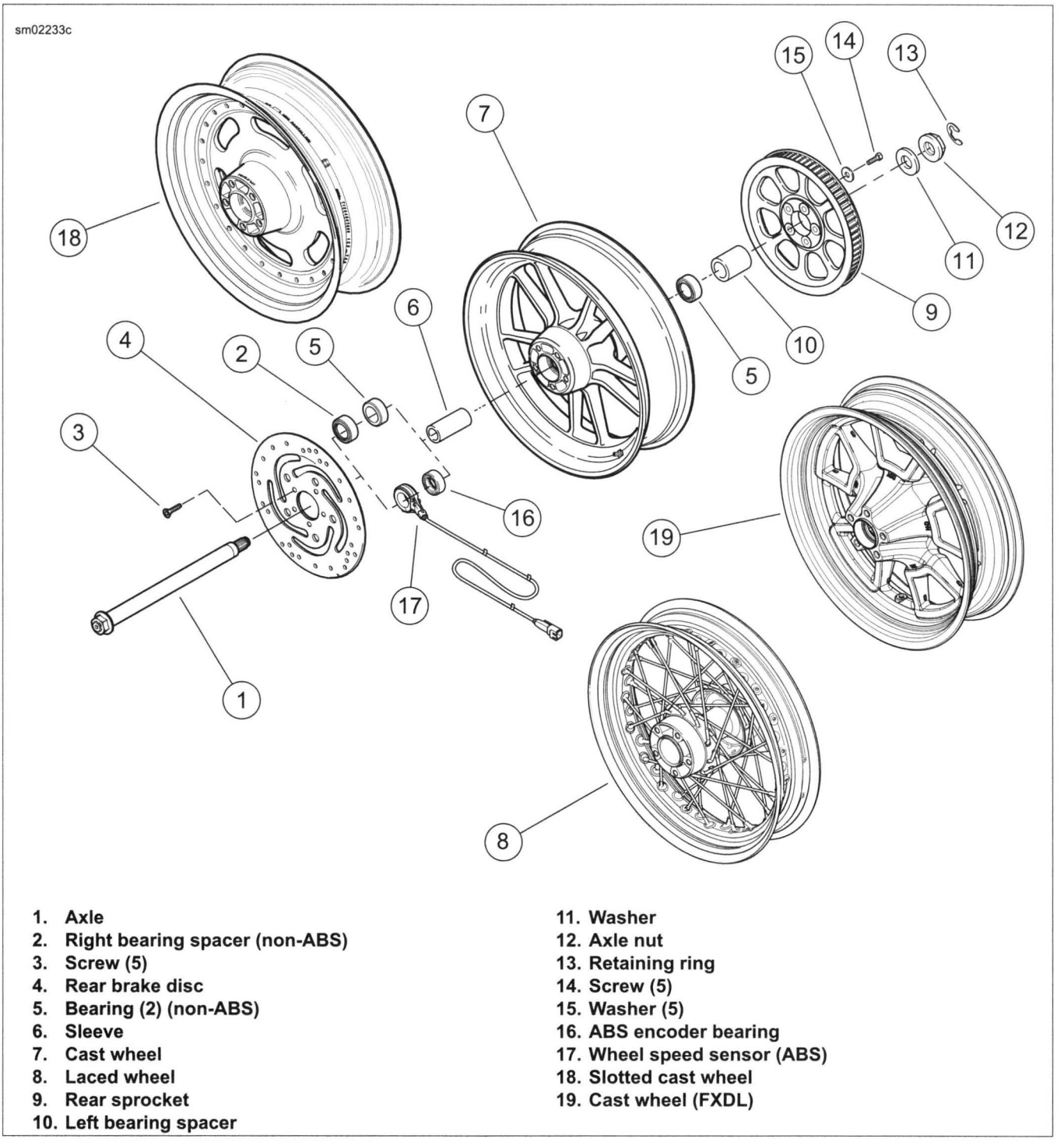

1. **Axle**
2. **Right bearing spacer (non-ABS)**
3. **Screw (5)**
4. **Rear brake disc**
5. **Bearing (2) (non-ABS)**
6. **Sleeve**
7. **Cast wheel**
8. **Laced wheel**
9. **Rear sprocket**
10. **Left bearing spacer**
11. **Washer**
12. **Axle nut**
13. **Retaining ring**
14. **Screw (5)**
15. **Washer (5)**
16. **ABS encoder bearing**
17. **Wheel speed sensor (ABS)**
18. **Slotted cast wheel**
19. **Cast wheel (FXDL)**

Figure 2-16. Rear Wheel/Hub

CLEANING AND INSPECTION

1. Inspect all parts for damage or excessive wear.
2. Inspect brake disc and pads. See 1.15 BRAKE PADS AND DISCS.
3. Inspect drive belt and sprocket. See 1.11 DRIVE BELT AND SPROCKETS.

ASSEMBLY

FASTENER	TORQUE VALUE	
Brake disc screws, rear	30-45 ft-lbs	40.7-61.0 Nm
Rear sprocket screws-initial torque	50 ft-lbs	67.8 Nm
Rear sprocket screws-final torque	67-73 ft-lbs	90.9-99.0 Nm

NOTICE

Do not re-use sprocket mounting screws. Re-using sprocket mounting screws can result in torque loss and damage to the sprocket and/or belt assembly. (00480b)

1. If hub and rim were disassembled, see 2.7 WHEEL LACING.
2. See Figure 2-16. Using **new** screws (3), install rear brake disc (4) on wheel, if removed.
3. Tighten screws to 30-45 ft-lbs (40.7-61.0 Nm).
4. Using **new** screws (14) and washers (15), install rear sprocket (9), if removed.
5. Tighten screws to 50 ft-lbs (67.8 Nm). Then loosen screws 180 degrees.
6. Final tighten screws to 67-73 ft-lbs (90.9-99.0 Nm).
7. Check that wheel and tire are true. see 2.8 CHECKING AND TRUING WHEELS.

INSTALLATION

FASTENER	TORQUE VALUE	
Shock mounting fastener, upper	30-40 ft-lbs	40.7-54.2 Nm
Shock mounting fastener, lower	30-40 ft-lbs	40.7-54.2 Nm
Rear axle nut	95-105 ft-lbs	128.8-142.4 Nm
Debris deflector screws	40-60 **in-lbs**	4.5-6.8 Nm

1. Apply a light coat of ANTI-SEIZE LUBRICANT to axle, bearing bores and spacer sleeve bore.
2. Roll wheel into rear fork and position brake caliper mount between wheel and fork. Verify that notch in caliper mount is engaged with tab on fork.
3. Pull drive belt over sprockets. Make sure that brake disc is centered between brake pads.

NOTE

ABS models: *See 2.15 ABS MODULE (EHCU) and Figure 2-17 for proper wheel speed sensor orientation.*

4. Install axle:
   a. From right side, carefully insert axle through right rear fork, spacer (non-ABS) or wheel speed sensor (ABS), and rear caliper bracket.
   b. Continue sliding axle through wheel hub sleeve, rear sprocket, left spacer and left rear fork.

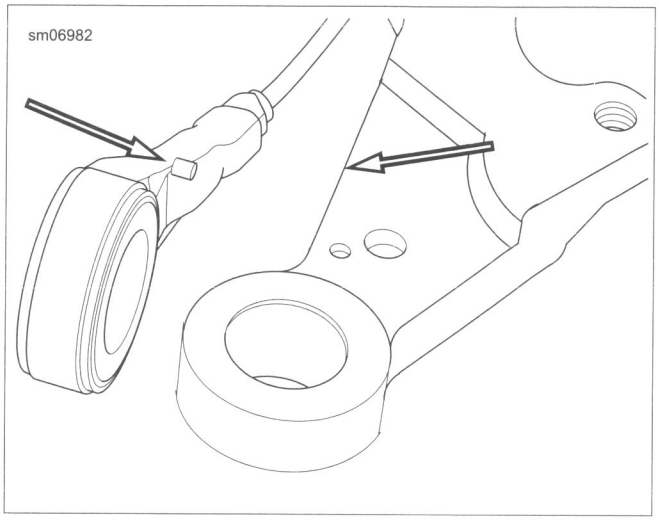

Figure 2-17. Rear Wheel Speed Sensor Index Pin (ABS Models)

NOTE

Caliper to rear wheel clearance is minimal. To prevent damage to surfaces, be careful when installing caliper.

5. Install caliper assembly to rear fork. See 2.13 REAR BRAKE CALIPER.
6. Install brake pads and retaining pin. See 1.15 BRAKE PADS AND DISCS.
7. See Figure 2-15. Attach rear shocks.
   a. Apply two or three drops of LOCTITE 243 MEDIUM STRENGTH THREADLOCKER AND SEALANT (blue) to threads of lower shock mounting screws (2).
   b. Lift rear fork. Install both shock absorbers with lower shock mounting screws (2).
   c. Tighten upper shock nuts to 30-40 ft-lbs (40.7-54.2 Nm).
   d. Tighten lower shock fasteners to 30-40 ft-lbs (40.7-54.2 Nm).

⚠WARNING

Check wheel bearing end play after tightening axle nut to specified torque. Excessive end play can adversely affect stability and handling and can cause loss of control, which could result in death or serious injury. (00285b)

⚠WARNING

Do not exceed specified torque when tightening axle nut. Exceeding torque can cause wheel bearings to seize during vehicle operation, which could result in death or serious injury. (00408e)

8. See Figure 2-14. Install washer and axle nut (2) on left side of axle.
   a. Tighten axle nut to 95-105 ft-lbs (128.8-142.4 Nm).
   b. Install retaining ring (3).

9. Install debris deflector using three screws. Tighten to 40-60 **in-lbs** (4.5-6.8 Nm). Install belt guard. See 2.20 BELT GUARD AND DEBRIS DEFLECTOR.

⚠WARNING

Whenever a wheel is installed and before moving the motorcycle, pump brakes to build brake system pressure. Insufficient pressure can adversely affect brake performance, which could result in death or serious injury. (00284a)

10. Pump brakes to move pistons out until brake pads contact rotor. Verify piston location against pads.
11. Verify correct axle alignment. See 2.9 VEHICLE ALIGNMENT.
12. Adjust drive belt deflection. See 1.11 DRIVE BELT AND SPROCKETS.

INSPECT

NOTICE

When lifting a motorcycle using a jack, be sure jack contacts both lower frame tubes where down tubes and lower frame tubes converge. Never lift by jacking on cross-members, oil pan, mounting brackets, components or housings. Failure to comply can cause serious damage resulting in the need to perform major repair work. (00586d)

1. Raise the wheel.
2. Turn the wheel through several rotations.

NOTES

- *Keep wheel speed sensor and ABS encoder bearing away from magnetic fields.*
- *When checking end play, pull or push on the wheel not the brake disc. Pulling or pushing brake disc can distort disc causing a false end play reading.*

3. Check end play:
   a. See Figure 2-18. Mount a magnetic base dial indicator to the brake disc. Set the indicator contact point on the end of the axle.
   b. Firmly push the wheel to one side. Zero the dial indicator gauge.
   c. Firmly pull the wheel back. Note the reading of the dial indicator.
   d. Repeat the procedure to verify the reading.
   e. Replace the bearings if end play exceeds 0.002 in (0.051 mm) or if there is drag, rough rotation or abnormal noise.

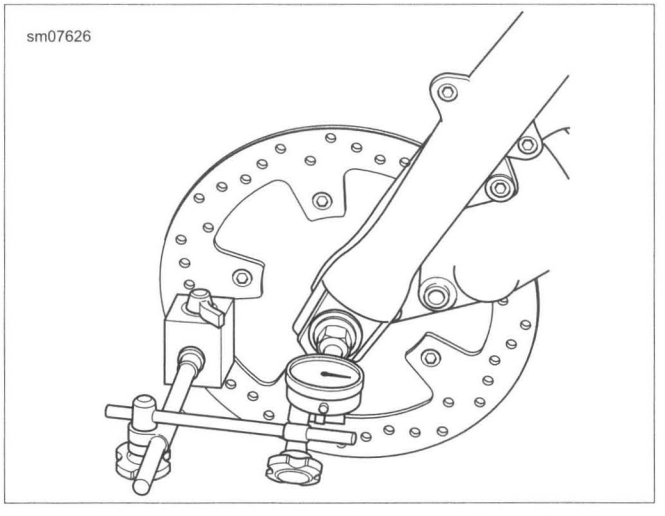

Figure 2-18. Wheel Bearing Inspection (Front Wheel Shown)

REMOVAL

PART NUMBER	TOOL NAME
HD-44060-10A	COLLET
HD-44060-11A	COLLET
HD-44060C	WHEEL BEARING REMOVER/INSTALLER

1. Remove wheel. See 2.4 FRONT WHEEL or 2.5 REAR WHEEL.
2. On models with single front brake disc, remove hub plate from wheel on opposite side of front brake disc.
3. If servicing rear wheel, remove the sprocket.

NOTES

- *On front wheel, remove the primary brake disc side (left) bearing first.*
- *See Figure 2-19. Some wheel hubs may not provide adequate support for the puller bridge. In these cases center a used brake disc over the hub to support the puller bridge while removing the bearings.*

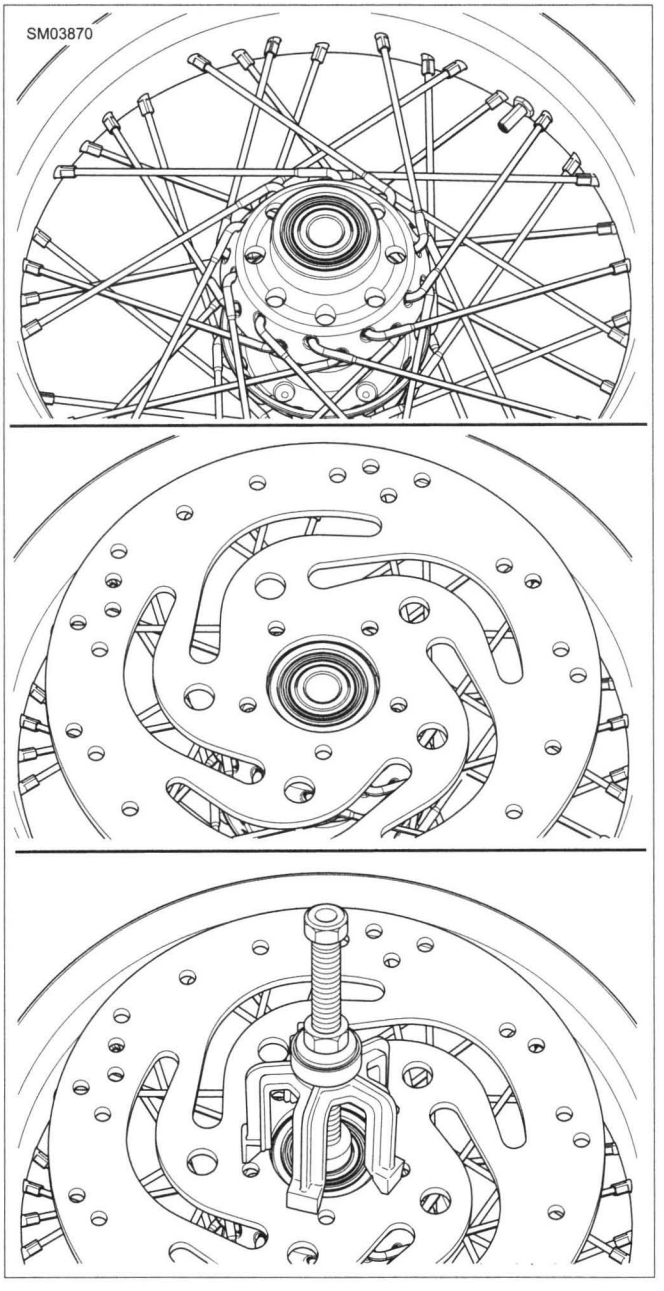

Figure 2-19. Brake Disk as Puller Aid

4. See Figure 2-20. Sparingly apply graphite lubricant to threads of forcing screw (1) of WHEEL BEARING REMOVER/INSTALLER (Part No. HD-44060C).
5. Install nut (2), washer (3) and bearing (4) on forcing screw. Insert assembly through hole in bridge (5).

NOTE

Standard and ABS bearings require different collets. Choose the appropriate one to remove the bearing.

- ***Non-ABS models:*** *Use COLLET (Part No. HD-44060-10A).*
- ***ABS models:*** *Use COLLET (Part No. HD-44060-11A).*

6. Place steel ball inside collet. Install collet at end of forcing screw.

NOTE

See Figure 2-21. If the brake disc does not mount to the wheel hub, similar to the rear wheel, the hub may not provide adequate support for the puller bridge. In this case, place a spare brake disc having the small center hole over the end of the hub to support the puller bridge.

7. Insert collet into bearing. Hold forcing screw (1) and turn hex on collet (6) until lip makes firm contact with inside edge of bearing.
8. See Figure 2-22. Turn hex nut (2) until bearing is free. Discard bearing.
9. Remove spacer sleeve from hub.
10. Repeat steps to remove remaining bearing from opposite side of wheel.

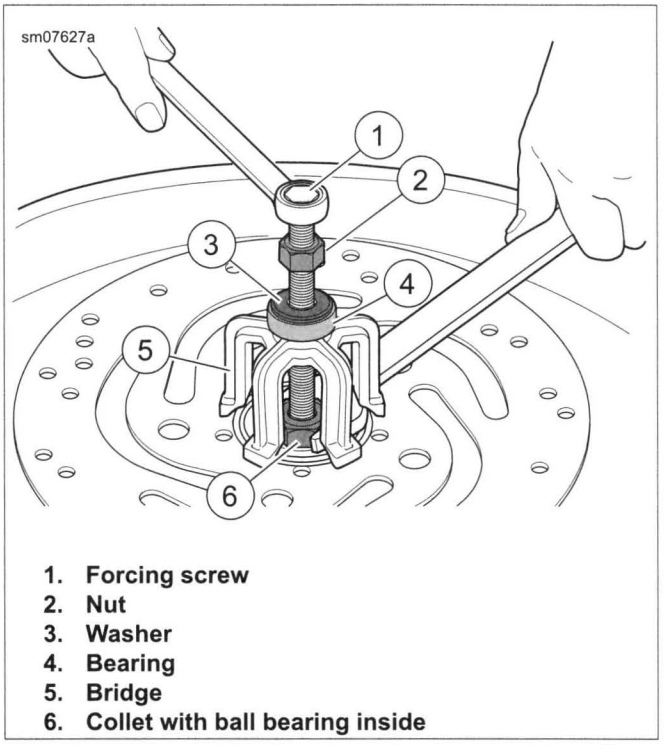

1. **Forcing screw**
2. **Nut**
3. **Washer**
4. **Bearing**
5. **Bridge**
6. **Collet with ball bearing inside**

Figure 2-20. Wheel Bearing Removal Tool

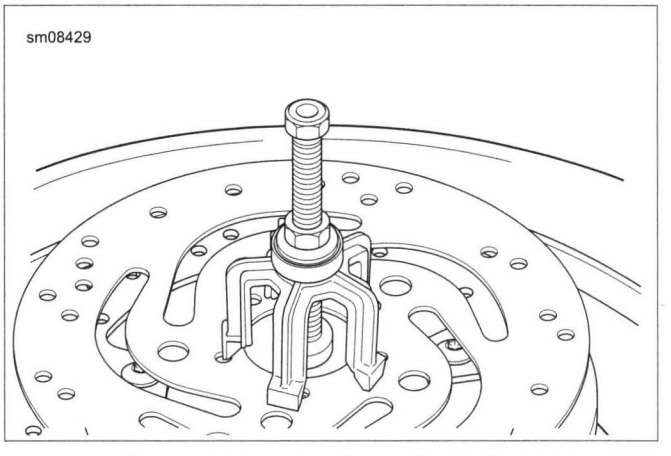

Figure 2-21. Using Scrap Brake Disc

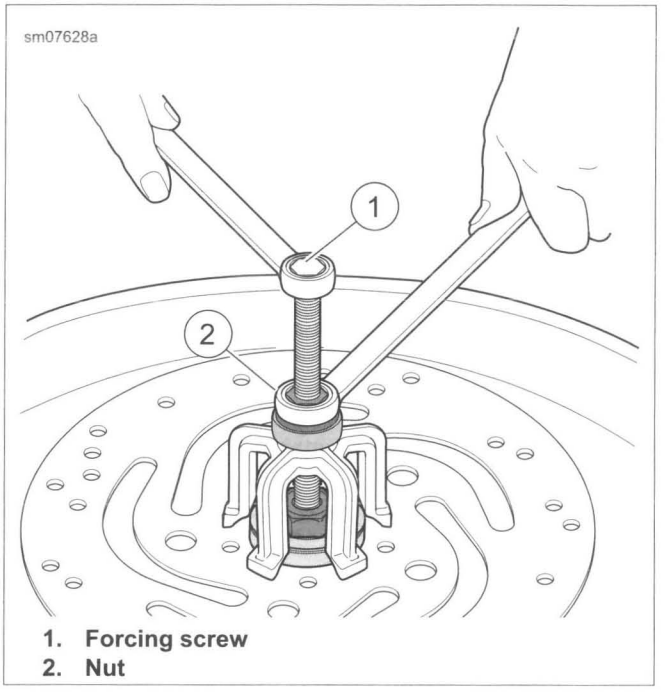

1. **Forcing screw**
2. **Nut**

Figure 2-22. Removing Bearing

INSTALLATION

PART NUMBER	TOOL NAME
HD-44060-8	1 INCH INSTALLER
HD-44060C	WHEEL BEARING REMOVER/INSTALLER

NOTES

- *Keep ABS encoder bearings away from magnetic fields (such as magnetic parts trays, magnetic base dial indicators, alternator rotors) or damage occurs.*
- *Always replace both bearings as a complete set.*

1. See Figure 2-23. Sparingly apply graphite lubricant to threads of threaded rod (1) of WHEEL BEARING REMOVER/INSTALLER (Part No. HD-44060C).

NOTES

- *Primary side is the brake rotor side of the wheel. For dual disc front wheels, the primary side is the left side of the wheel.*
- *Install first bearing on primary brake disc side of hub, which is identified by having one or two grooves cut into the disc mounting surface.*
- *Install ABS bearing on the primary brake disc side of the wheel.*

2. Install support plate (2) onto rod (1) and slide rod through hub from the side opposite the primary brake side.

NOTE

Bearing orientation is important.

3. See Figure 2-24. Place the bearing on the rod.
   a. Standard bearing with the lettered side against installer (5).
   b. ABS bearing with red side inward and tan side against installer (5).
4. Place 1 INCH INSTALLER (Part No. HD-44060-8) (5), bearing (4), flat washer (3) and nut (2) onto rod.
5. Turn nut (2) until bearing is fully seated.
6. Install spacer sleeve in hub.
7. Reverse tool then install opposite side bearing until bearing contacts spacer sleeve.
8. If rear wheel was serviced, install the sprocket.
9. On models with single front brake disc, install hub plate to wheel on opposite side of front brake disc.
10. Install wheel. See 2.4 FRONT WHEEL or 2.5 REAR WHEEL.

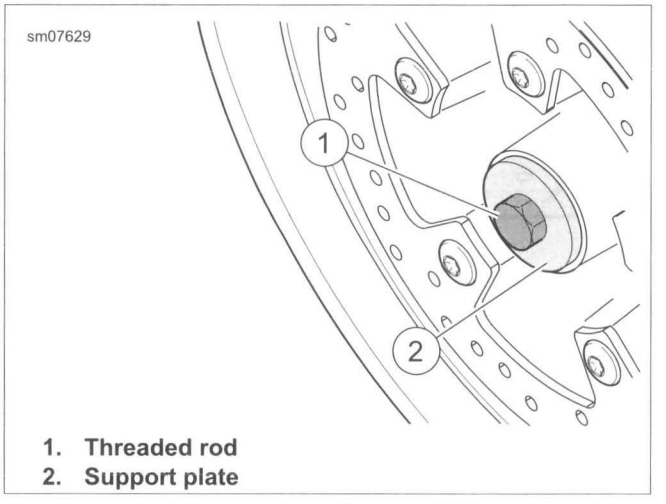

1. **Threaded rod**
2. **Support plate**

Figure 2-23. Assembling Installation Tool

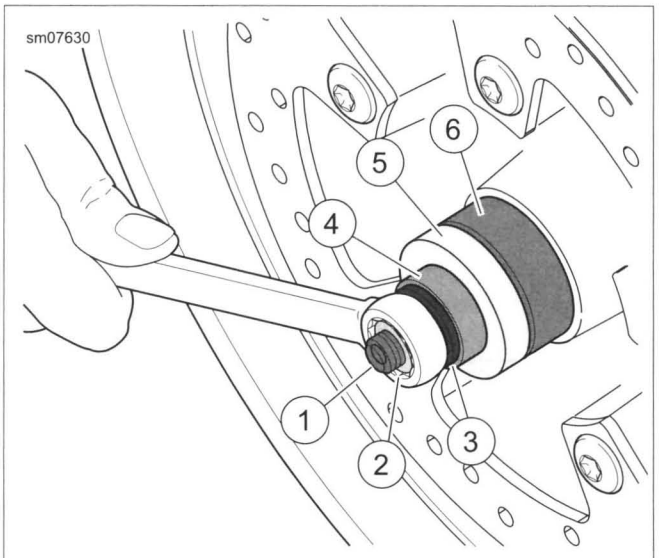

1. Threaded rod
2. Nut
3. Washer
4. Bearing
5. Installer
6. Wheel bearing

Figure 2-24. Installing Bearings

WHEEL LACING: ANGLE FLANGE HUB

NOTES

- *See Figure 2-25. The following procedure is valid for wheels that use an angle flange hub regardless of rim style or diameter.*
- *Disc mounting surface for primary brake side of hub has one or two grooves.*

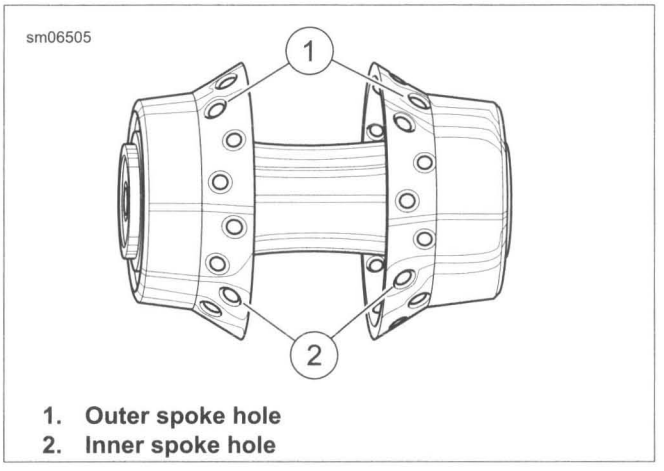

1. **Outer spoke hole**
2. **Inner spoke hole**

Figure 2-25. Angle Flange Hub

1. Place hub on workbench:
   a. **Front:** primary brake side up.
   b. **Rear:** brake side down.
2. Install all spokes in the lower flange.
3. See Figure 2-26. Flip hub over. Gather all outer spokes and hold upright with a rubber band. Repeat with the inner spokes using a second rubber band.
4. Install spokes in remaining flange.
5. Rotate the lower flange spokes as far as they go:
   a. Outer spokes clockwise.
   b. Inner spokes counterclockwise.
6. Center the rim over the hub and spokes assembly and support on wooden blocks approximately 1.5 in (38.1 mm) thick.
   a. If valve is not located in the center of the rim, place valve hole facing up.
   b. If the valve is located in the center of the rim, it can be placed either side up.

NOTE

Install nipples until approximately 1/8 in (3.2 mm) of spoke thread shows.

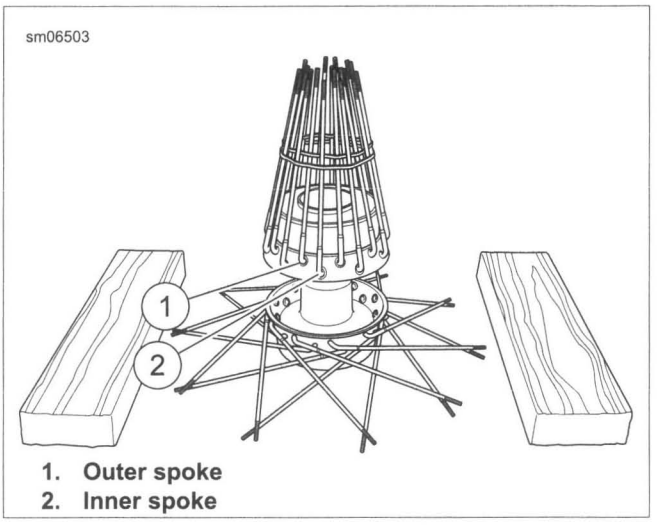

1. **Outer spoke**
2. **Inner spoke**

Figure 2-26. Spokes Gathered

7. Install lower flange outer spokes and loosely install spoke nipples:
   a. **Rim with side valve hole:** See Figure 2-27. Start at the valve stem hole (1).
   b. **Rim with center valve hole:** See Figure 2-28. Start at the first hole counterclockwise (1) from valve stem hole.
8. Install remaining outer spokes in every fourth hole.
9. Install lower flange inner spokes and loosely install spoke nipples:
   a. Starting at the second hole counterclockwise (2) from first spoke installed, install inner spoke.
   b. Install remaining inner spokes in every fourth hole.
10. Carefully release upper flange inner spokes and fan out around rim, rotating them clockwise.
11. Starting at the first hole counterclockwise (3) from first spoke installed, install inner spoke. Install remaining inner spokes in every fourth hole.
12. Carefully release upper flange outer spokes and fan out around rim, rotating them counterclockwise.
13. Install outer spokes in remaining holes (4).
14. Verify that spoke heads are seated. See 2.8 CHECKING AND TRUING WHEELS.
   a. Evenly hand-tighten spoke nipples until snug.
   b. Only tighten until slack is removed.
   c. Proper torque is applied when the wheel is trued.
   d. Adjust offset and true the wheel.

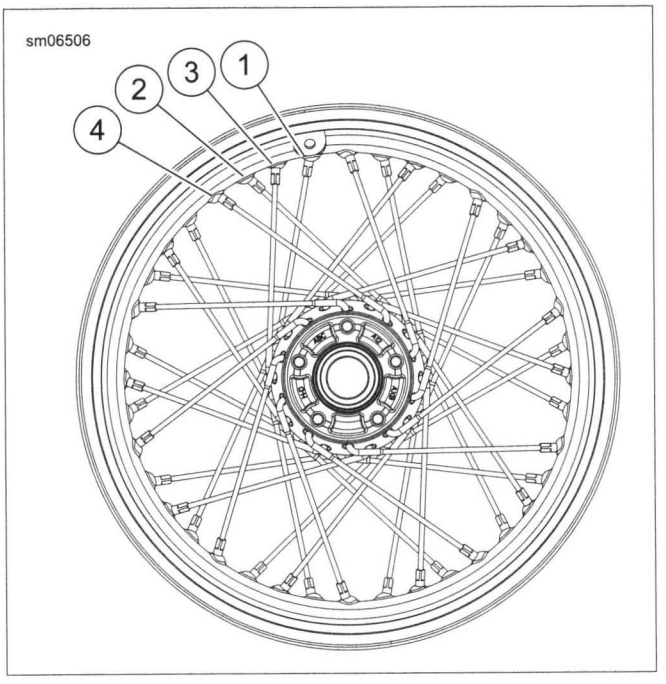

Figure 2-27. Side Valve Rim

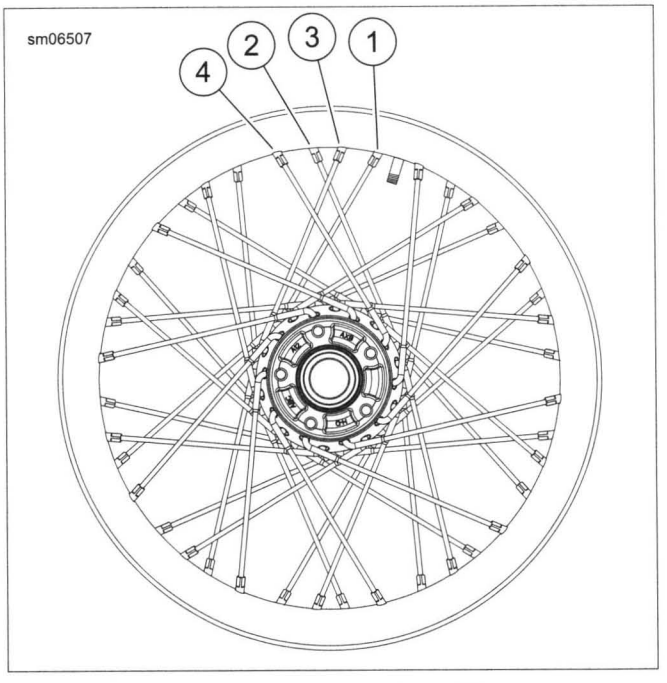

Figure 2-28. Center Valve Rim

WHEEL LACING: STRAIGHT FLANGE HUB, SINGLE HOLE CIRCLE

NOTES

- *See Figure 2-30. This procedure is valid for laced wheels that use a straight flange, single spoke hole circle hub regardless of rim style or diameter.*
- *The primary brake side of the hub has one or two grooves cut into the disc mounting surface.*

1. See Figure 2-34. Divide spokes into inner and outer groups.
   a. Inner spokes (2) have long heads.
   b. Outer spokes (1) have short heads.
2. Lubricate all spoke threads and nipple shoulders with tire mounting lubricant.
3. See Figure 2-30. Place hub on bench with the primary brake disc side up. Insert one outer spoke (1) (short head) into any bottom flange hole and swing it clockwise. Insert an inner spoke (2) (long head) in the next hole counter-clockwise from the outer spoke. Swing the inner spoke counterclockwise over the outer spoke.
4. Find the hole (3) in the upper flange directly above the two spokes and insert a long head inner spoke. Insert all remaining spokes in the upper flange, alternating the inner and outer spokes.
5. Flip the hub (primary brake side down) and install remaining spokes, again alternating inner and outer spokes.
6. See Figure 2-31. Group all spokes on the upper flange into two bundles of equal numbers and secure each group with throttle grips.

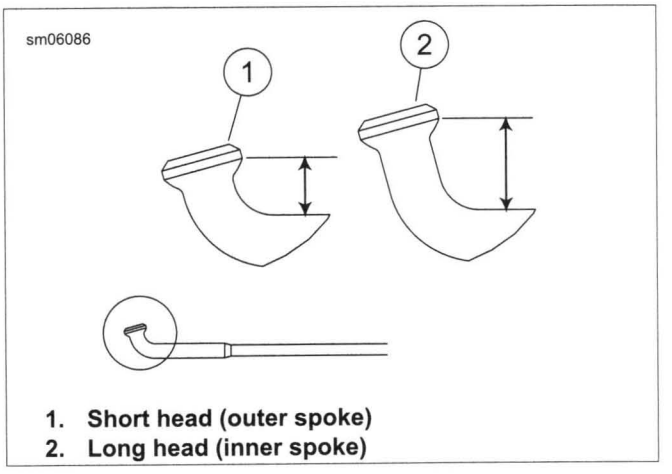

1. Short head (outer spoke)
2. Long head (inner spoke)

Figure 2-29. Spoke Heads

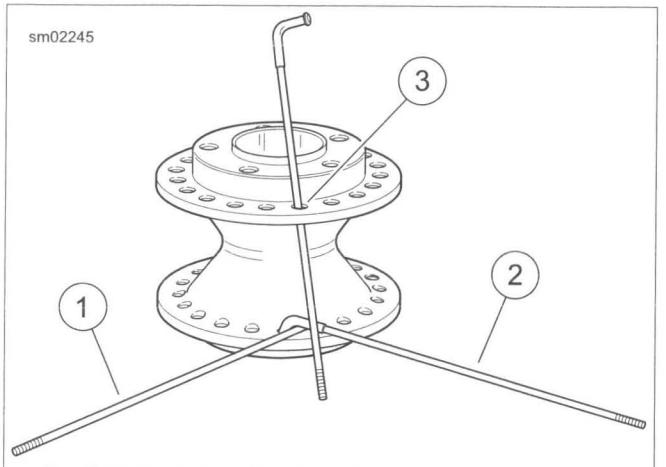

1. **Outer spoke (short head)**
2. **Inner spoke (long head)**
3. **Hole directly above two spokes**

Figure 2-30. Lacing Single Row Wheel Hub

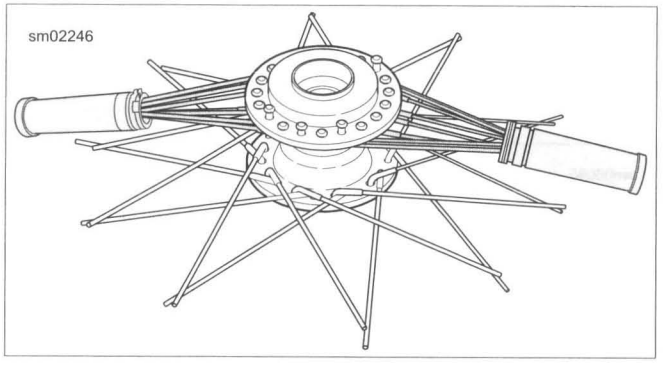

Figure 2-31. Bundling Top Spokes

7. Angle all lower flange spokes as far as they will go without overlapping a LIKE spoke (inner must not cross inner; outer must not cross outer):
   a. Outer spokes (short head) clockwise.
   b. Inner spokes (long head) counterclockwise. All inner spokes lay over outer spokes.
8. Support the rim on wooden blocks approximately 0.75 in (19 mm) thick.
9. Place the hub and spoke assembly into the rim and centered in the rim.

NOTE

Install nipples until approximately 1/8 in (3.2 mm) of spoke thread shows.

10. See Figure 2-32. Beginning with the 2nd hole counterclockwise (1) from valve stem hole, install lower flange outer spokes (short head) in every 4th hole. Loosely install spoke nipples.

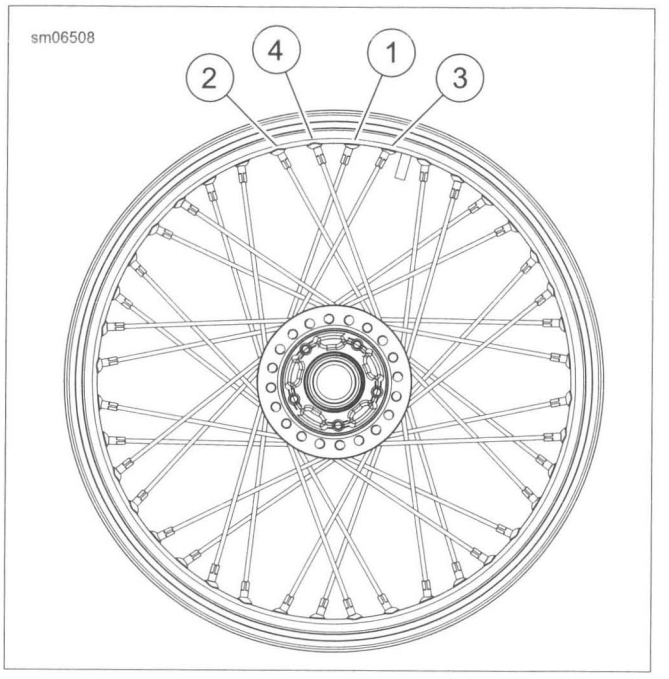

Figure 2-32. Flat Flange Hub, Single Row

11. Beginning with 4th hole counterclockwise (2) from valve stem hole, install lower flange inner spokes (long head) in every 4th hole. Loosely install spoke nipples. Each inner spoke will cross four outer spokes.
12. See Figure 2-33. Carefully release each top bundle and fan the spokes around the rim edge.

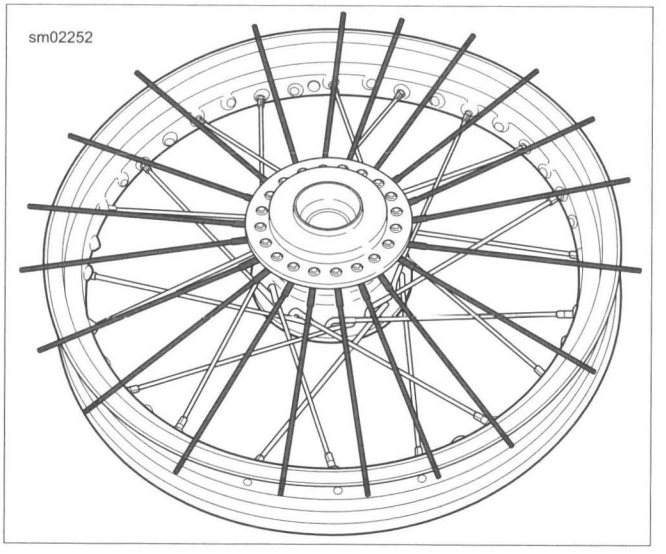

Figure 2-33. Fanning Top Flange Spokes

13. Rotate all the upper flange inner spokes (long head) clockwise, one at a time, leaving the outer spokes (short head) resting on the rim.

NOTE

Be sure outer spokes do not fall under the inner spoke and become trapped.

14. See Figure 2-32. Beginning with the first hole counterclockwise (3) from valve stem hole, install upper flange inner spokes (long head) in every 4th hole.

15. Rotate outer spokes (short head) counterclockwise and install in the remaining holes (4) in the rim.
16. Verify spoke heads are seated. See 2.8 CHECKING AND TRUING WHEELS.
    a. Evenly hand-tighten spoke nipples until snug.
    b. Only tighten until slack is removed.
    c. Proper torque will be applied when the wheel is trued.
    d. Adjust offset and true the wheel.

WHEEL LACING: STRAIGHT FLANGE HUB, DUAL HOLE CIRCLE

NOTES

- *See Figure 2-35. This procedure is valid for 40-spoke wheels that use a straight flange, dual spoke hole circle hub regardless of rim style or diameter.*
- *The primary brake side of the hub has one or two grooves cut into the disc mounting surface.*

1. See Figure 2-34. Divide spokes into inner and outer groups.
    a. Inner spokes (2) have long heads.
    b. Outer spokes (1) have short heads.
2. Lubricate all spoke threads and nipple shoulders with tire mounting lubricant.
3. Place hub on bench with the primary brake disc side up.
4. Install first two spokes:
    a. See Figure 2-35. Insert one outer spoke (short head) into any upper flange outer hole. Swing it counterclockwise.
    b. Insert an inner spoke (long head) in the next hole counterclockwise from the outer spoke.
    c. Swing the inner spoke clockwise under the outer spoke.
5. Insert all remaining spokes in the upper flange, alternating the inner and outer spokes.
6. Flip the wheel hub (primary brake side down) and install remaining spokes in the same manner, again alternating inner and outer spokes.
7. See Figure 2-36. Group all spokes on the upper flange into two bundles of ten. Secure each group with throttle grips.

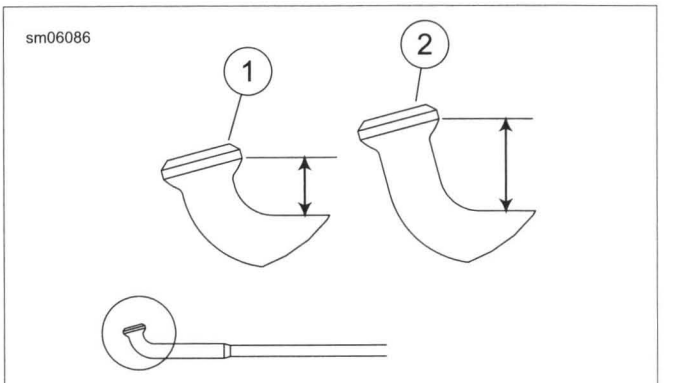

1. Short head (outer spoke)
2. Long head (inner spoke)

Figure 2-34. Spoke Heads

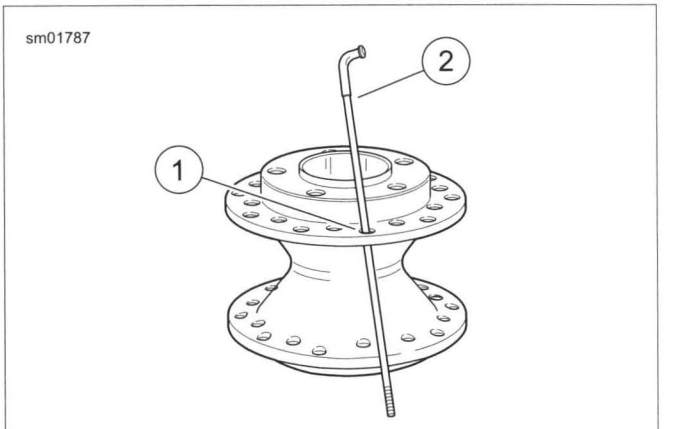

1. Outer spoke hole
2. Outer spoke (short head)

Figure 2-35. Lacing Dual Row Wheel Hub

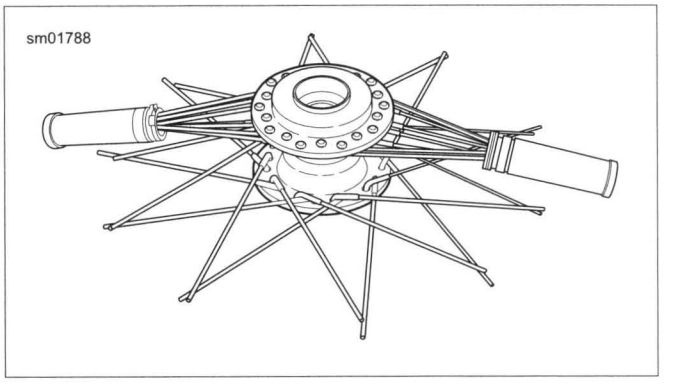

Figure 2-36. Bundling Top Spokes

8. Angle all lower flange spokes as far as they will go without overlapping a LIKE spoke (inner must not cross inner; outer must not cross outer):
    a. Outer spokes (short head) clockwise.
    b. Inner spokes (long head) counterclockwise. All inner spokes lay over outer spokes.
9. Support the rim on wooden blocks approximately 0.75 in (19 mm) thick.

10. Place the hub and spoke assembly into the rim and centered in the rim.

NOTE

Install nipples until approximately 1/8 in (3.2 mm) of spoke thread shows.

11. See Figure 2-37. Beginning with the 1st hole counterclockwise (1) from valve stem hole, install lower flange outer spokes (short head) in every 4th hole. Loosely install spoke nipples.

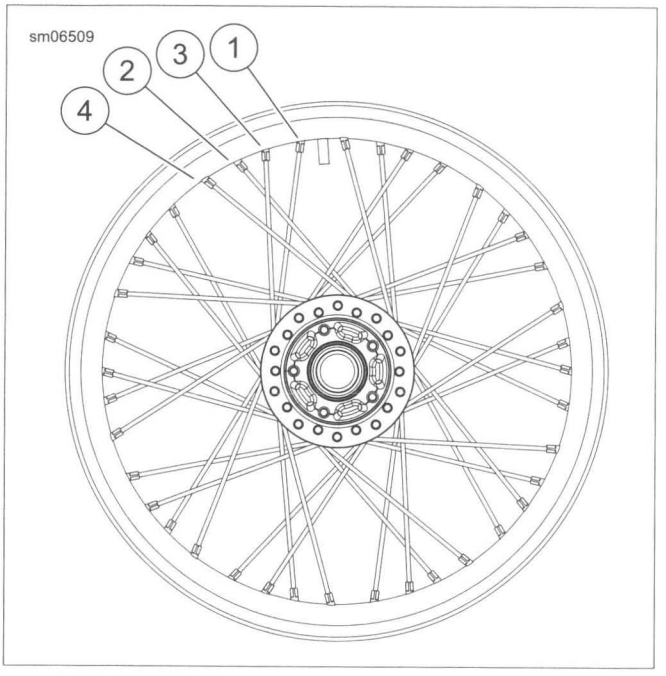

Figure 2-37. Flat Flange Hub, Dual Row

12. Beginning with 3rd hole counterclockwise (2) from valve stem hole, install lower flange inner spokes (long head) in every 4th hole. Loosely install spoke nipples. Each inner spoke will cross four outer spokes.

13. See Figure 2-38. Carefully release each top bundle and fan the spokes around the rim edge.

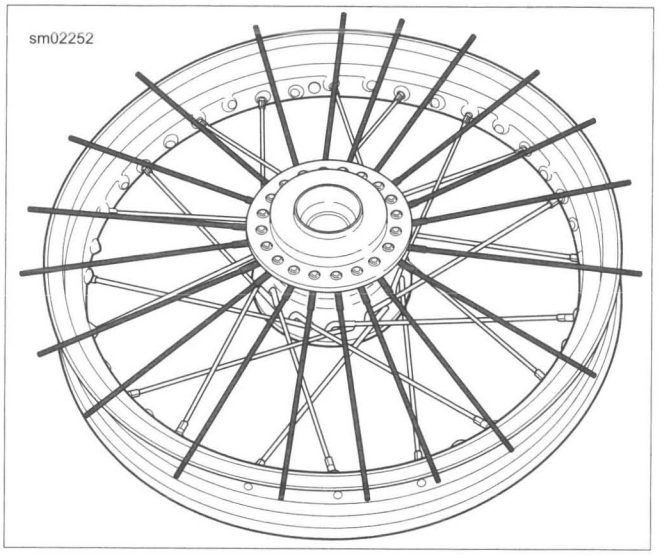

Figure 2-38. Fanning Top Flange Spokes

14. Rotate all the upper flange inner spokes (long head) clockwise, one at a time, leaving the outer spokes (short head) resting on the rim.

NOTE

Be sure outer spokes do not fall under the inner spoke and become trapped.

15. See Figure 2-37. Beginning with the 2nd hole counterclockwise (3) from valve stem hole, install upper flange inner spokes (long head) in every 4th hole.

16. Rotate outer spokes (short head) counterclockwise. Install in the remaining holes (4) in the rim.

17. Verify spoke heads are seated. See 2.8 CHECKING AND TRUING WHEELS.
    a. Evenly hand-tighten spoke nipples until snug.
    b. Only tighten until slack is removed.
    c. Proper torque will be applied when the wheel is trued.
    d. Adjust offset and true the wheel.

GENERAL

Check wheels for lateral and radial runout before installing a **new** tire or tube. Checking cast or laced wheels is performed using the same procedure.

Laced wheels having excess runout can be trued. Cast wheels must be replaced. Never attempt to straighten cast wheels.

Always check condition of the wheel bearings before checking or adjusting wheel runout. See 1.7 TIRES AND WHEELS, Wheel Bearings.

CHECKING WHEEL RUNOUT

PART NUMBER	TOOL NAME
HD-99500-80	WHEEL TRUING AND BALANCING STAND

Check wheels for both radial runout and lateral runout. If either measurement is not within specification:

- **Cast wheel:** Replace the wheel.
- **Laced wheel:** Adjust spokes to true the wheel. See steps in this section.

Checking Radial Runout

1. See Figure 2-39. Mount wheel in WHEEL TRUING AND BALANCING STAND (Part No. HD-99500-80).
2. Adjust gauge rod or dial indicator to the rim's tire bead safety hump.
3. Rotate wheel and measure distance at several locations. Runout must not exceed 0.030 in (0.76 mm).

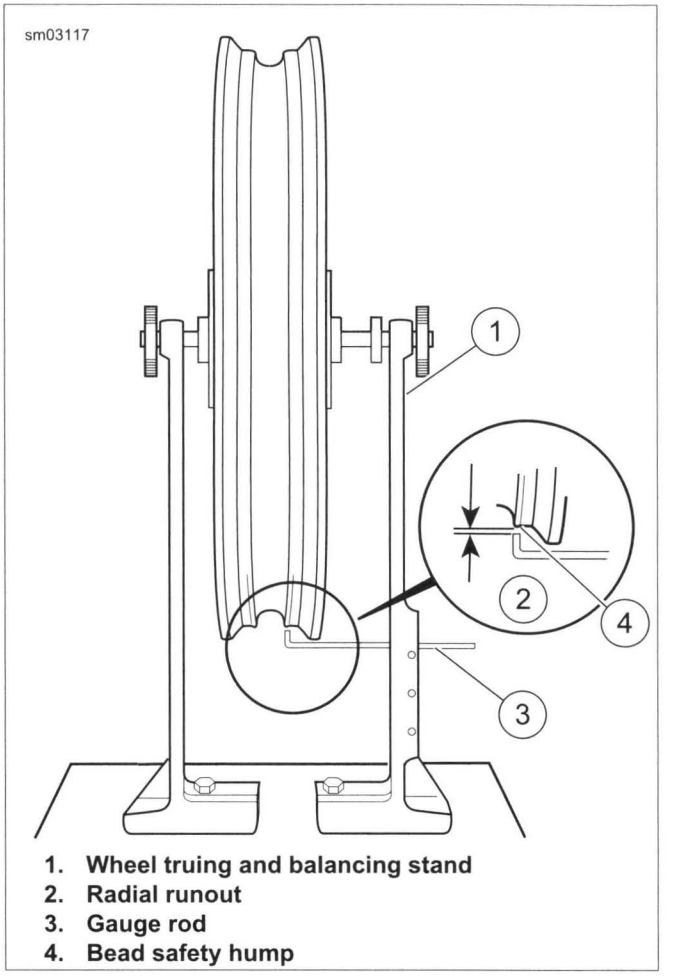

1. **Wheel truing and balancing stand**
2. **Radial runout**
3. **Gauge rod**
4. **Bead safety hump**

Figure 2-39. Checking Radial Runout

Checking Lateral Runout

1. See Figure 2-40. Mount wheel in WHEEL TRUING AND BALANCING STAND (Part No. HD-99500-80).

NOTE

Dial indicators are more accurate than gauge rods.

2. Place a gauge rod near, or dial indicator on the rim bead flange.
3. Measure distance at several locations. Lateral runout must not exceed 0.030 in (0.76 mm).

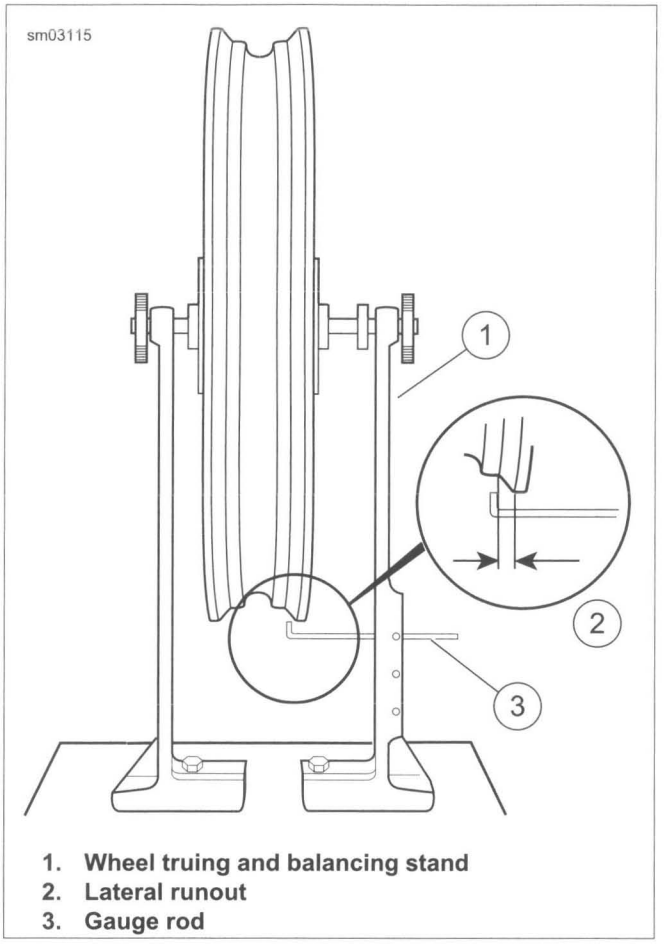

1. **Wheel truing and balancing stand**
2. **Lateral runout**
3. **Gauge rod**

Figure 2-40. Checking Lateral Runout

LACED WHEEL RIM OFFSET

PART NUMBER	TOOL NAME
HD-94681-80	SPOKE NIPPLE WRENCH
HD-99500-80	WHEEL TRUING STAND

1. See Figure 2-41. Prepare rim.
   a. Place a piece of tape to mark the center of each group of four spokes as shown.
   b. Mark groups directly opposite one another and approximately 90 degrees apart.
   c. Use different colors of tape or number each group.

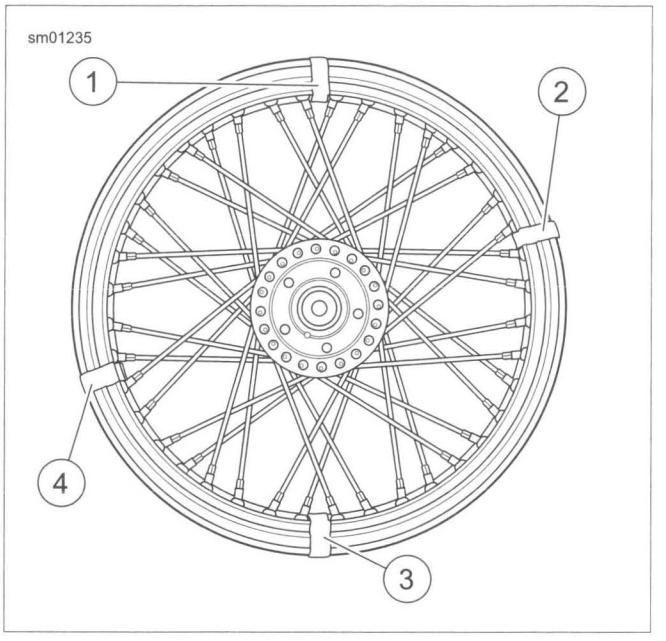

Figure 2-41. Marking Spoke Groups

2. See Figure 2-42. Mount wheel in WHEEL TRUING STAND (Part No. HD-99500-80) so hub turns freely on its bearings.

NOTE

Disc mounting surface for primary brake side of hub has one or two grooves.

3. Measure offset.
   a. Lay a straightedge across the primary brake disc mounting surface and one of the marked spoke groups.
   b. See Figure 2-43. Measure the distance from the straightedge to the location shown to determine distance A.
   c. Compare to dimensions in Table 2-10.

NOTES

- *Always loosen the appropriate spokes before tightening the other two. Reversing this procedure causes the rim to become out-of-round.*

  *For example: If the **right** side is **less** than specification, **loosen** the two spokes on the hub **right** side. Then **tighten** the two spokes attached to the hub **left** side.*
- *Tighten or loosen spokes one flat at a time and recheck measurement.*
- *Always work on groups that are opposite each other to maintain radial runout.*

4. If the dimension is not correct, adjust the four spokes using SPOKE NIPPLE WRENCH (Part No. HD-94681-80). Turn all four spokes an equal number of turns until offset is at specification.
5. Repeat the previous step for all groups on the wheel.
6. Check wheel runout. See 2.8 CHECKING AND TRUING WHEELS, True Laced Wheels.

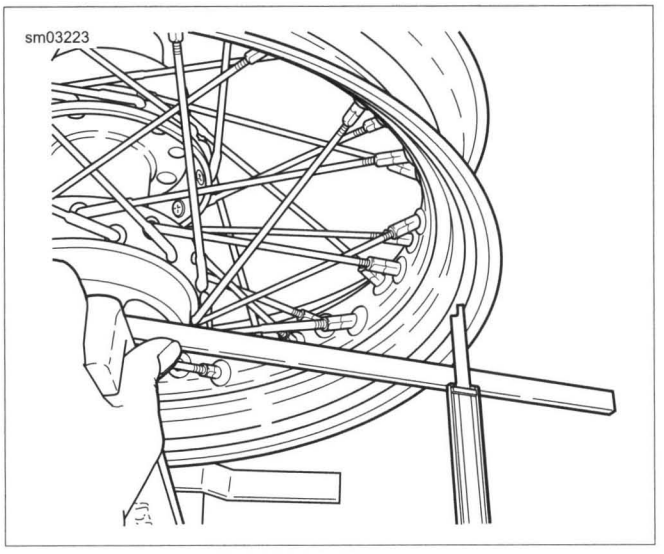

Figure 2-42. Checking Wheel Hub Offset Dimension (Typical)

Table 2-10. Laced Wheel Hub Offset Dimensions

LACED WHEEL TYPE	WHEEL SIZE	OFFSET (A)	
		IN	MM
Steel	17"	0.615-0.645	15.62-16.38
	19"	1.135-1.165	28.83-29.59
	21"	1.525-1.555	38.74-39.50
Chrome aluminum profile	17"	0.385-0.415	9.78-10.54
	19"	0.885-0.915	22.48-23.24
	21"	1.555-1.585	39.48-40.26

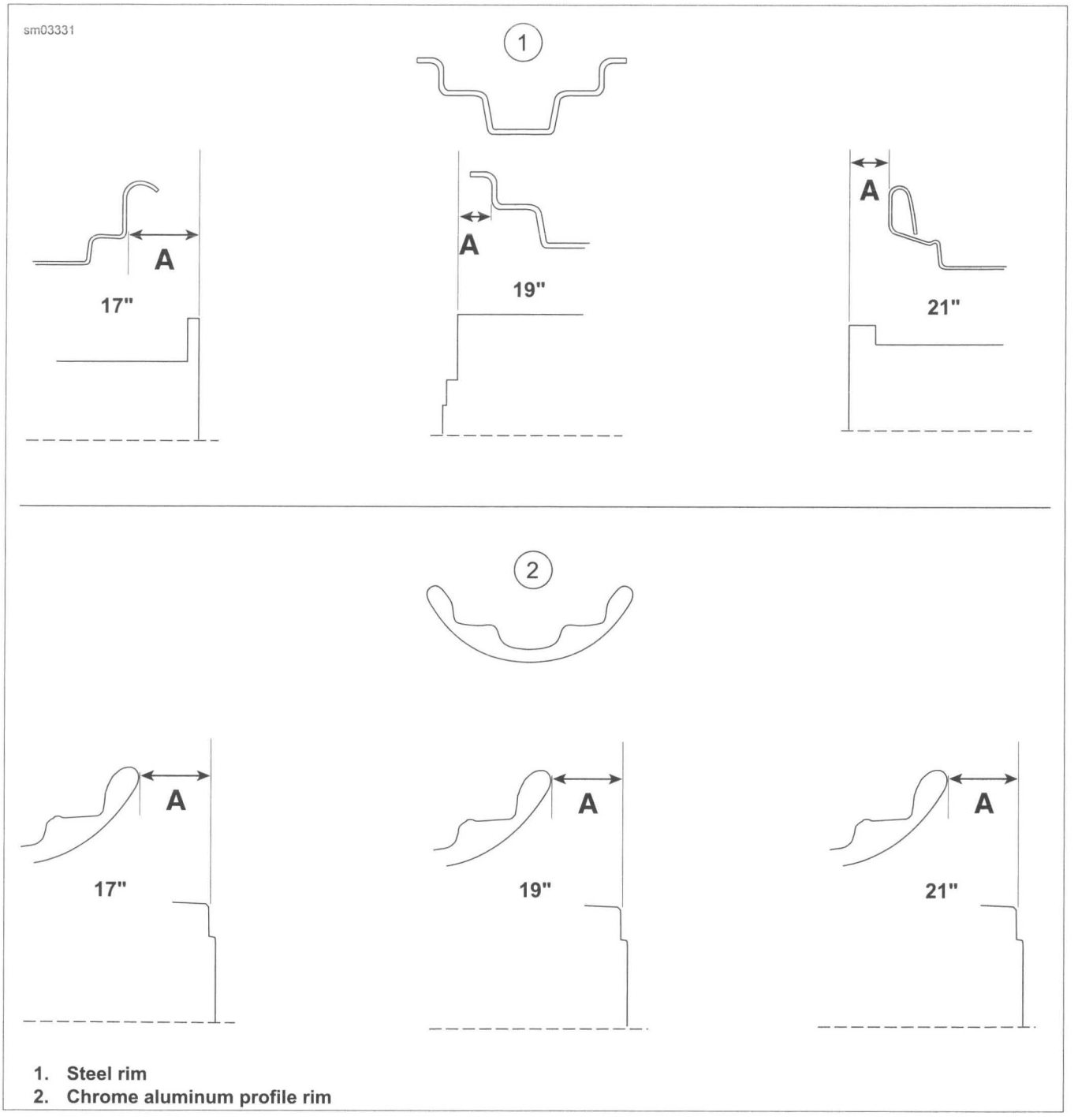

1. Steel rim
2. Chrome aluminum profile rim

Figure 2-43. Laced Wheel Hub Offset Dimensions

TRUE LACED WHEELS

PART NUMBER	TOOL NAME
HD-48985	SPOKE TORQUE WRENCH
HD-94681-80	SPOKE NIPPLE WRENCH
HD-99500-80	WHEEL TRUING AND BALANCING STAND

FASTENER	TORQUE VALUE	
Spoke nipple	55 **in-lbs**	6.2 Nm

NOTES

- *Dial indicators are more accurate than gauge rods.*
- *Perform radial truing before lateral truing.*

Adjust Radial Runout

1. See Figure 2-44. Mount wheel in WHEEL TRUING AND BALANCING STAND (Part No. HD-99500-80).
2. Adjust the gauge rod (3) near to the tire bead safety hump (4). If using a dial indicator, place the tip on the safety bead hump.
3. **Straight flange hub:** Seat each spoke head in the hub flange using a flat nose punch and mallet.

NOTES

- *Always loosen the appropriate spokes before tightening the other two. Reversing this procedure causes the rim to become out of round.*
- *Tighten or loosen spoke. Then recheck measurement. Small changes in the spokes can make large changes in the runout.*
- *Always work on groups that are opposite each other to maintain radial runout.*

4. Spin the rim slowly. Check radial runout (2). The rim must be true within 0.030 in (0.76 mm).
   a. Use SPOKE NIPPLE WRENCH (Part No. HD-94681-80).
   b. If the rim contacts the gauge on or near a marked group of spokes, loosen the spokes in the group on the opposite side of the rim. Then tighten the spokes in the group where the rim makes contact an equal number of turns.
   c. If the rim contacts the gauge between two marked groups, loosen the spokes in both groups on the opposite side of the rim. Then tighten the spoke groups on the side of the rim that makes contact an equal number of turns.
5. When the wheel is true, start at the valve stem hole and tighten any loose spoke nipples one turn at a time until they are snug.
6. Working alternately across the wheel, use SPOKE TORQUE WRENCH (Part No. HD-48985) evenly tighten all spokes to specification listed in Table 2-11.
7. **Straight flange hub:** Verify that each spoke head is seated in the hub flange using a flat nose punch and mallet.
8. Verify that radial runout is still within specification.
9. Proceed to lateral runout.

⚠WARNING

Spokes that are too tight can draw nipples through the rim or distort hub flanges. Spokes that are too loose can continue to loosen when put in service. Either condition can adversely affect stability and handling, which could result in death or serious injury. (00286a)

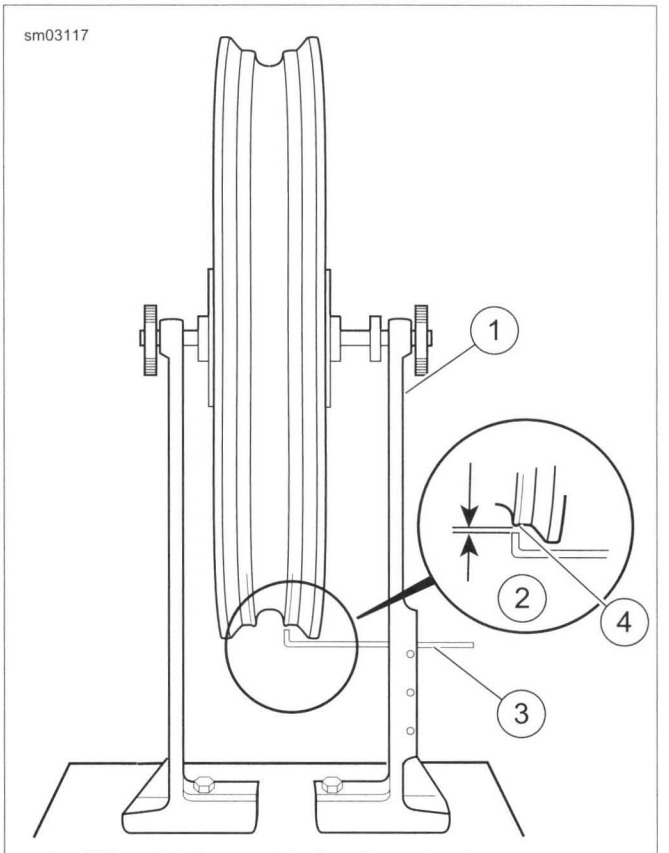

1. **Wheel truing and balancing stand**
2. **Radial runout**
3. **Gauge rod**
4. **Bead safety hump**

Figure 2-44. Checking Radial Runout

Table 2-11. Spoke Nipple Torque Specification

RIM TYPE	MINIMUM TORQUE
All	55 **in-lbs** (6.2 Nm)

Adjust Lateral Runout

NOTE

Dial indicators are more accurate than gauge rods.

1. See Figure 2-45. Adjust the gauge rod (3) near to the rim bead flange. If using a dial indicator, place the tip against the bead flange.
2. Rotate the rim slowly to check lateral runout (2). If runout exceeds 0.030 in (0.76 mm), adjust spokes:

NOTES

- *Always loosen the appropriate spokes before tightening the other two. Reversing this procedure causes the rim to become out of round.*
- *Tighten or loosen spoke. Then recheck measurement. Small changes in the spokes can make large changes in the runout.*
- *Always work on groups that are opposite each other to maintain radial runout.*

3. Working in groups of four, loosen two spokes on the tight side and tighten the two spokes on the loose side.
4. Repeat with each group until wheel is within specification.
5. Verify that all spoke nipples are tightened to the specification. Refer to Table 2-11.
6. File or grind off ends of spokes that protrude through the nipples to prevent puncturing tube or rim seal.

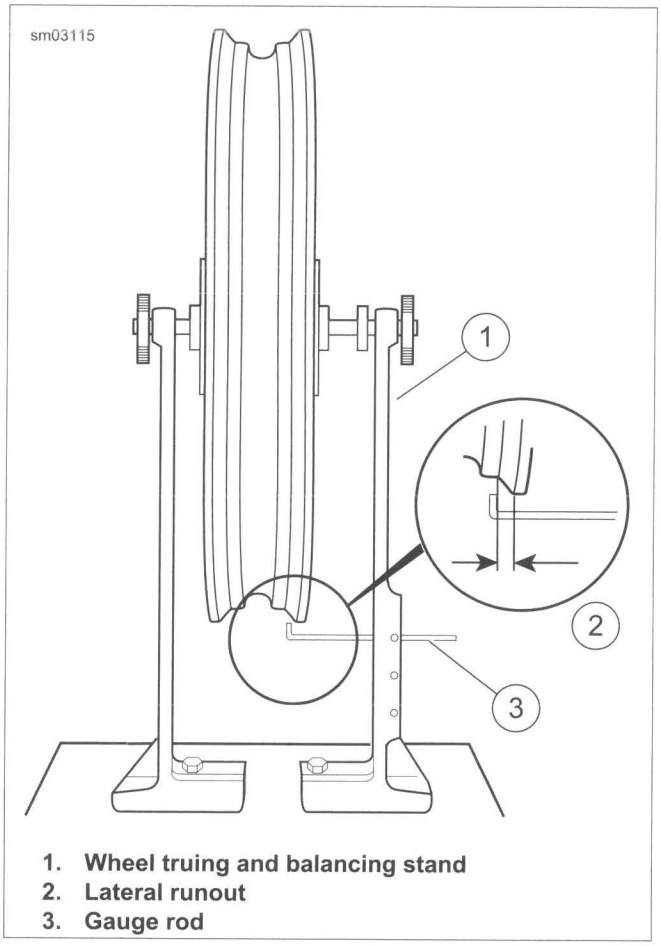

1. **Wheel truing and balancing stand**
2. **Lateral runout**
3. **Gauge rod**

Figure 2-45. Checking Lateral Runout

INSPECTION

PART NUMBER	TOOL NAME
HD-48856-A	AXLE ALIGNMENT PLUG SET

FASTENER	TORQUE VALUE	
Front isolator mounting bolts to front engine bracket	18-22 ft-lbs	24.4-29.9 Nm
Rear isolator mounting bolts to transmission case	22-27 ft-lbs	29.9-36.6 Nm
Front and rear isolator mounting bolts to frame	22-27 ft-lbs	29.9-36.6 Nm

⚠WARNING

Only a Harley-Davidson dealer should perform vehicle alignment. Improper alignment can adversely affect stability and handling, which could result in death or serious injury. (00060a)

⚠WARNING

Check vehicle alignment according to following procedures. Incorrect alignment can adversely affect stability and handling, which could result in death or serious injury. (00287a)

1. Verify that wheels are true. See 2.8 CHECKING AND TRUING WHEELS.
2. Check steering head bearing adjustment. Adjust if necessary. See 1.17 STEERING HEAD BEARINGS.
3. Create an alignment tool. See Figure 2-48. To verify accurate measurements, obtain a piece of 1/8 in (3.2 mm) aluminum welding rod 12.25 in (311 mm) long.
   a. Grind one end down to a blunt point.
   b. With a pliers, bend the rod 90 degrees as shown.
   c. Place a snug fitting O-ring or cable strap on the rod to act as a slide measurement indicator.
4. Raise the rear of the motorcycle.
5. See Figure 2-46. Using AXLE ALIGNMENT PLUG SET (Part No. HD-48856-A), insert axle alignment plugs (1, 2) into left and right ends of rear axle.
6. See Figure 2-47. Measure the wheel alignment. With the blunt point of the alignment tool inserted in the rear fork pilot hole:
   a. Slide the O-ring along the tool until it is aligned with the center of the alignment plug as shown.
   b. Measure and record distance from end of tool to O-ring.
   c. Repeat steps for the opposite side.

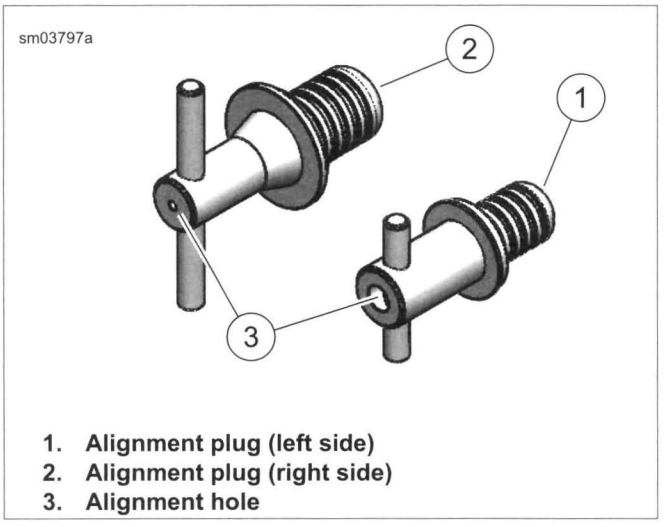

1. **Alignment plug (left side)**
2. **Alignment plug (right side)**
3. **Alignment hole**

Figure 2-46. Axle Alignment Plugs

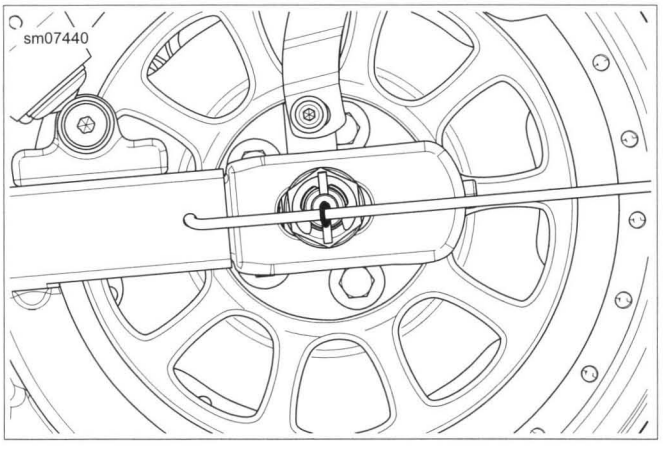

Figure 2-47. Measuring Alignment

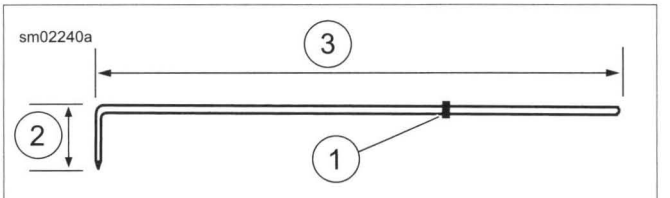

1. **O-ring**
2. **2.25 in (57 mm)**
3. **12.25 in (311 mm)**

Figure 2-48. Alignment Tool

7. See Figure 2-49. Left and right measurements must be equal within 1/32 in (0.8 mm). Use axle adjusters to adjust within specifications.
8. See Figure 2-50. Remove the bolt (2) which attaches the top stabilizer link (1) to the engine mounting bracket.
9. Position front wheel so brake disc is vertical using an inclinometer. If possible, use a digital inclinometer for the best accuracy.

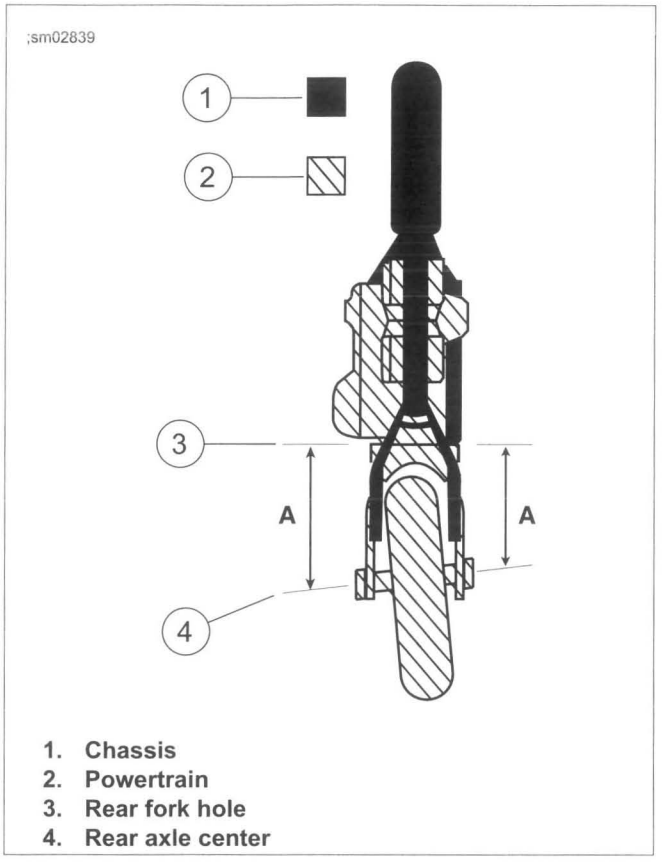

1. **Chassis**
2. **Powertrain**
3. **Rear fork hole**
4. **Rear axle center**

Figure 2-49. Adjust Axle Adjusters until A Equals A

NOTES

- *Place motorcycle upright and level with exhaust system installed before proceeding.*
- *Only adjust stabilizer link on end with threads showing. Adjusting or loosening other end tears the isolator.*
- *Minimum clearance between the fuel tank tunnel and the head of the left stabilizer link mounting bolt is 0.250 in (6.4 mm).*

10. Loosen jamnut (3) on stabilizer link. Adjust the stabilizer so the bolt removed in previous step can be reinstalled without pushing the engine to the right or left. Tighten jamnut.
11. Check the rear brake disc with the inclinometer to verify that it is parallel to the front brake disc.
12. Rear brake disc must be parallel to font brake disc. If necessary, adjust the top stabilizer link until the rear brake is parallel to within 1 degree of the front brake disc.
13. If front and rear brake discs cannot be adjusted to within 1 degree, inspect the frame, front fork and rear fork for damage.

⚠WARNING

To prevent damage to fuel tank and possible fire or explosion, which could cause death or serious injury, maintain clearance specified in service manual between fuel tank and head of left stabilizing link mounting bolt. (00262a)

14. Do not adjust top stabilizer link more than five full turns to bring the brake discs into specification. If stabilizer link requires more than five turns for proper adjustment, inspect the frame, front fork and rear fork for damage.
15. Tighten the stabilizer jamnut (3).

NOTE

Maximum range for stabilizer link adjustment is five full turns. If necessary, use the following steps to adjust for excessive vibration.

16. Verify transmission is in NEUTRAL.
17. Loosen, but do not remove, ALL the mounting bolts on the engine isolators.
18. Start the engine. Let the engine run for approximately 5 seconds. This procedure will center the mounts on the frame and power train assembly.
19. Tighten isolator mounting bolts in sequence:
    a. Tighten front isolator mounting bolts to front engine bracket to 18-22 ft-lbs (24.4-29.9 Nm).
    b. Tighten rear isolator mounting bolts to transmission case to 22-27 ft-lbs (29.9-36.6 Nm).
    c. Tighten front and rear isolator mounting bolts to frame to 22-27 ft-lbs (29.9-36.6 Nm).

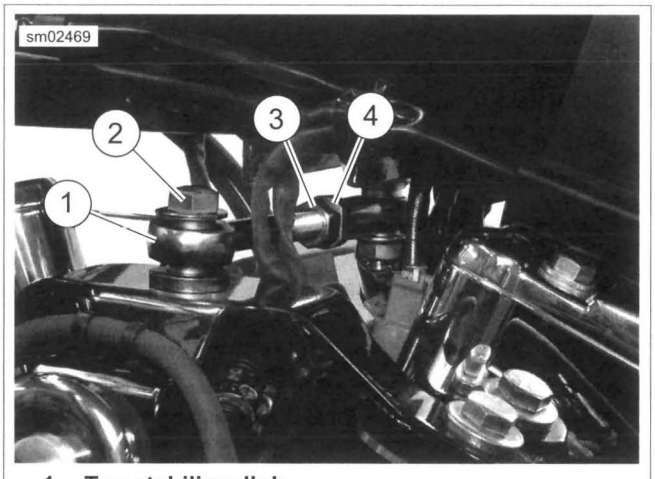

1. **Top stabilizer link**
2. **Bolt**
3. **Jamnut**
4. **Adjusting stud (nut)**

Figure 2-50. Top Stabilizer

GENERAL

⚠WARNING

Do not use parts from single caliper repair kits (9/16 inch bore) on dual caliper models. Likewise, do not use parts from dual caliper repair kits (11/16 inch bore) on single caliper models. Using incorrect parts can cause brake failure, which could result in death or serious injury. (00278a)

⚠CAUTION

Direct contact of D.O.T. 4 brake fluid with eyes can cause irritation. Avoid eye contact. In case of eye contact flush with large amounts of water and get medical attention. Swallowing large amounts of D.O.T. 4 brake fluid can cause digestive discomfort. If swallowed, obtain medical attention. Use in well ventilated area. KEEP OUT OF REACH OF CHILDREN. (00240a)

NOTICE

D.O.T. 4 brake fluid will damage painted and body panel surfaces it comes in contact with. Always use caution and protect surfaces from spills whenever brake work is performed. Failure to comply can result in cosmetic damage. (00239b)

NOTICE

Do not allow dirt or debris to enter the master cylinder reservoir. Dirt or debris in the reservoir can cause improper operation and equipment damage. (00205c)

See Figure 2-51. Master cylinders designed for single disc (one caliper) operation have a 9/16 in (14.3 mm) bore. The bore size is stamped on the master cylinder assembly inboard of the handlebar clamp bracket.

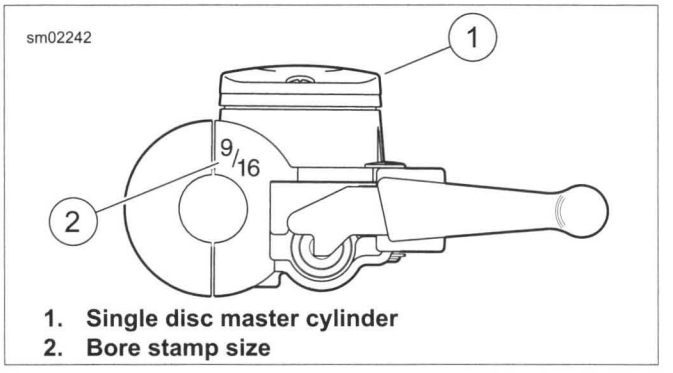

1. **Single disc master cylinder**
2. **Bore stamp size**

Figure 2-51. Bore Size

REMOVAL AND DISASSEMBLY

1. Drain brake fluid.
   a. Open bleeder screw cap on front brake caliper.
   b. Install end of a length of clear plastic tubing over caliper bleeder screw. Place free end of tubing in a suitable container.
   c. Open bleeder screw approximately one-half turn.
   d. Pump brake hand lever to drain brake fluid.
   e. Close bleeder screw.

NOTICE

Avoid leakage. Be sure gaskets, banjo bolt(s), brake line and master cylinder bore are clean and undamaged before assembly. (00322a)

2. Remove bolt and two steel/rubber washers to disconnect fitting of hydraulic brake line from master cylinder. Discard washers.

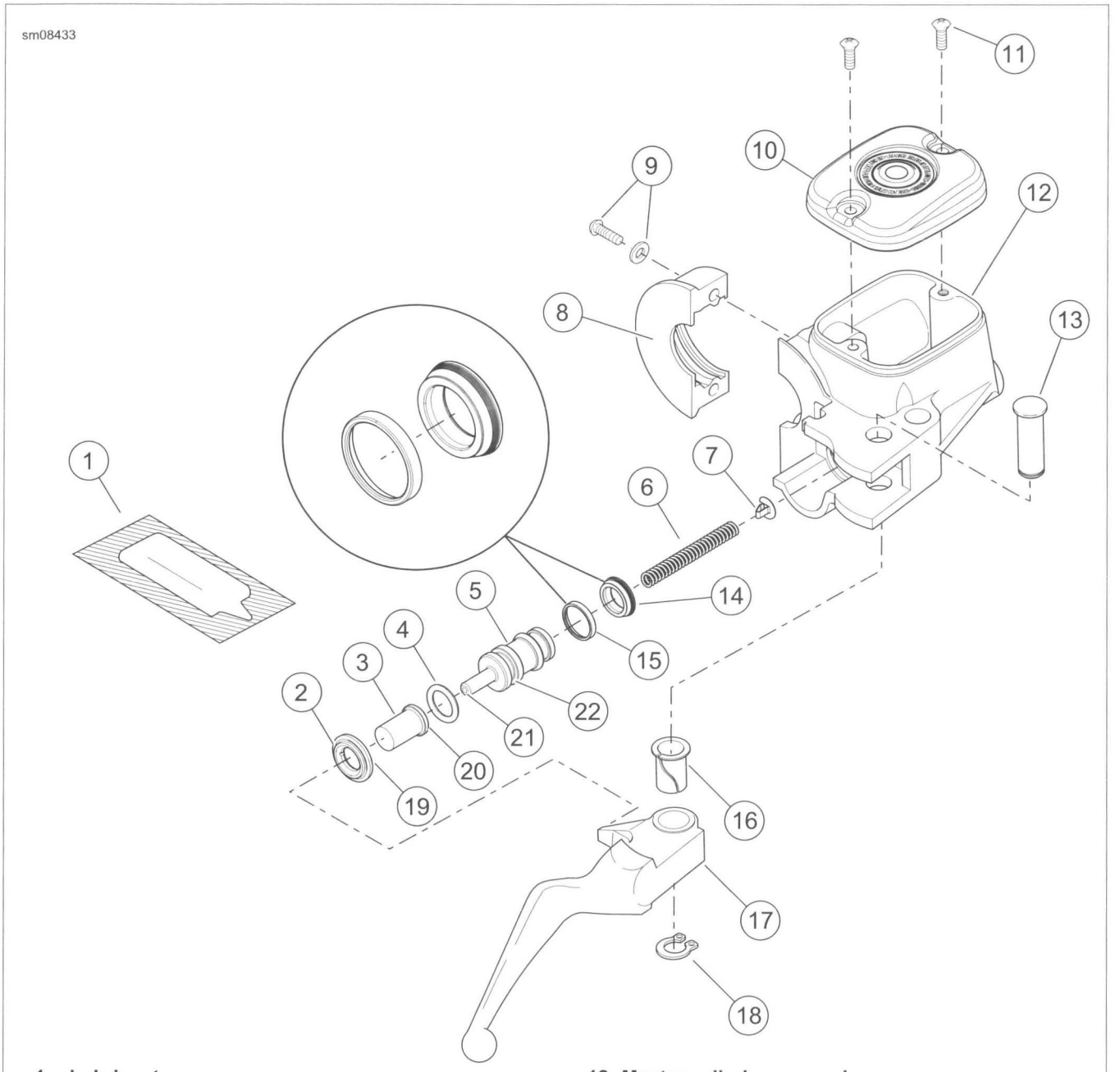

1. **Lubricant**
2. **Wiper**
3. **Piston cap**
4. **O-ring**
5. **Piston**
6. **Spring**
7. **Retainer**
8. **Handlebar clamp**
9. **TORX screw and washer (2)**
10. **Cover**
11. **Screw (2)**
12. **Master cylinder reservoir**
13. **Pivot pin**
14. **Primary cup**
15. **Back-up ring**
16. **Bushing**
17. **Brake hand lever**
18. **Retaining ring**
19. **Flat side**
20. **Shoulder**
21. **Pin**
22. **O-ring groove**

Figure 2-52. Front Brake Master Cylinder

3. See Figure 2-52. Loosen both switch housing clamp screws.
4. Remove the two screws with flat washers (9) to detach the handlebar clamp (8) from the master cylinder reservoir (12).
5. Remove master cylinder.
6. Remove retaining ring (18) from pivot pin groove at bottom of master cylinder bracket.
7. Remove pivot pin (13) and brake hand lever (17).
8. Carefully remove wiper (2) with pick or similar tool.
9. Remove piston cap (3).

10. Remove piston (5) with O-ring (4), back-up ring (15) and primary cup (14).
11. Remove spring (6) and retainer (7).
12. Remove both screws (11) and cover (10).

CLEANING AND INSPECTION

⚠WARNING

Use denatured alcohol to clean brake system components. Do not use mineral-based solvents (such as gasoline or paint thinner), which will deteriorate rubber parts even after assembly. Deterioration of these components can cause brake failure, which could result in death or serious injury. (00291a)

⚠WARNING

Compressed air can pierce the skin and flying debris from compressed air could cause serious eye injury. Wear safety glasses when working with compressed air. Never use your hand to check for air leaks or to determine air flow rates. (00061a)

1. Clean all parts with denatured alcohol or DOT 4 BRAKE FLUID.
   a. Wipe parts dry with a clean, lint-free cloth.
   b. Clear drilled passages and bore with clean compressed air.

NOTE

Do not use a wire or similar instrument to clean drilled passages in bottom of reservoir.

2. Inspect parts for wear or damage. Replace parts if necessary.
3. Inspect the piston bore in the master cylinder housing for scoring, pitting or corrosion. Replace as necessary.
4. Carefully inspect the outlet port that mates with the brake line fitting. As a critical sealing surface, replace the master cylinder assembly if any damage is noted.
5. Carefully inspect the cover gasket for damage. Replace as necessary.

ASSEMBLY AND INSTALLATION

FASTENER	TORQUE VALUE	
Handlebar master cylinder clamp screws	60-80 **in-lbs**	6.8-9.0 Nm
Hand control module housing screws	35-45 **in-lbs**	4.0-5.1 Nm
Banjo bolt to front master cylinder	17-22 ft-lbs	23.0-29.8 Nm
Master cylinder reservoir cover screws: front cover	6-8 **in-lbs**	0.68-0.90 Nm

NOTE

*Always reassemble the master cylinder using **new** parts from the correct repair kit.*

1. See Figure 2-52. Fit O-ring (4) into O-ring groove (22) on outboard side of piston (5) (pin side).
2. Install back-up ring (15) on inboard side of piston so that flat side faces pin (21).

NOTE

Make sure outer diameter (OD) of primary cup fits into tapered side of back-up ring.

3. Fit primary cup (14) over lip on inboard side of piston, so that smaller (OD) fits into tapered side of back-up ring.
4. Coat piston bore of master cylinder reservoir with lubricant (1) supplied in the service parts kit. Also apply the lubricant to OD of installed O-ring, back-up ring and primary cup.
5. Install retainer (7) on end of spring (6).
6. Insert spring and retainer into piston bore, so that it seats against counterbore (recess) at bottom.
7. Slide piston over spring.
8. Fit wiper (2) over piston cap (3) so that flat side of wiper contacts cap shoulder.
9. Fit piston cap over pin (21).
10. Press down on wiper until it contacts the counterbore. Larger OD of wiper must be seated in groove on outlet side of piston bore.
11. Install the cover (10). Secure with two screws, but do not tighten now.
12. Align hole in brake hand lever (17) with hole in master cylinder bracket. From the top of the assembly, slide pivot pin (13) through bracket and hand lever.

⚠WARNING

Wear safety glasses or goggles when removing or installing retaining rings. Retaining rings can slip from the pliers and could be propelled with enough force to cause serious eye injury. (00312a)

13. Install **new** retaining ring (18) in pivot pin groove. Verify that retaining ring is completely seated in groove.
14. See Figure 2-53. Position the brake lever/master cylinder assembly inboard of the module housing assembly. Engage the tab (2) on the module housing assembly (1) in the groove (3) at the top of the brake lever bracket (4).
15. See Figure 2-52. Align the holes in the handlebar clamp (8) with holes in the master cylinder housing (12). Start the two screws (with flat washers). Position hand lever (17) and controls for rider comfort. Beginning with the top screw, tighten the screws to 60-80 **in-lbs** (6.8-9.0 Nm).

NOTE

Always tighten the lower module housing screw first. Make sure any gap between the upper and lower housings is at the front of the housing.

16. Tighten module housing screws to 35-45 **in-lbs** (4.0-5.1 Nm).

NOTICE

Avoid leakage. Be sure gaskets, banjo bolt(s), brake line and caliper bore are clean and undamaged before assembly. (00321a)

17. Attach brake line to master cylinder reservoir with banjo bolt and **new** sealing washers. Tighten banjo bolt to 17-22 ft-lbs (23.0-29.8 Nm).

⚠WARNING

Clean reservoir filler cap or cover before removing. Use only DOT 4 brake fluid from a sealed container. Contaminated fluid can adversely affect braking or clutch disengagement, which could result in death or serious injury. (00504d)

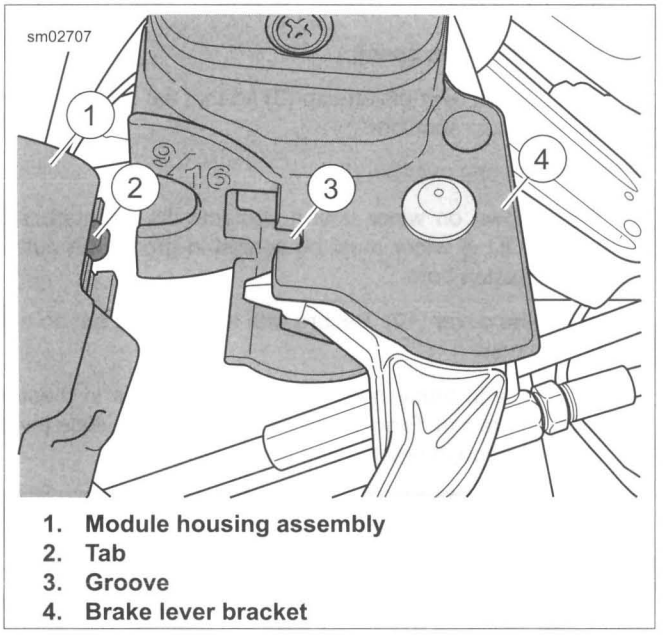

1. **Module housing assembly**
2. **Tab**
3. **Groove**
4. **Brake lever bracket**

Figure 2-53. Attach Master Cylinder to Right Handlebar Switches

NOTE

The shelf life of an unopened bottle of DOT 4 brake fluid is one year. Discard any opened and uncontaminated bottle after one week.

18. Remove cover from master cylinder reservoir. Stand up motorcycle so master cylinder is level. Add brake fluid to master cylinder reservoir until fluid level is 1/8-3/8 in (3.2-9.5 mm) from the top.

⚠WARNING

When any hydraulic brake component, line or connection is loosened or replaced on an ABS motorcycle, Digital Technician II must be used during the brake bleeding procedure to verify all air is removed from the system. Failure to properly bleed the brake system could adversely affect braking, which could result in death or serious injury. (00585c)

⚠WARNING

A plugged or covered relief port can cause brake drag or lock-up, which could lead to loss of control, resulting in death or serious injury. (00288a)

NOTE

Use only DOT 4 BRAKE FLUID from a sealed container.

19. Bleed front brake system. See 2.16 BLEEDING BRAKES.
20. Verify proper operation of the master cylinder relief port by actuating the brake pedal or lever. Actuate the brake hand lever. A slight spurt of fluid will break the fluid surface in the reservoir if internal components are working properly.
21. See Figure 2-54. Add brake fluid to the master cylinder reservoir until the fluid level is between the ledges on the fill level boss.
22. Install the master cylinder reservoir cover and gasket. Tighten to 6-8 **in-lbs** (0.68-0.90 Nm).
23. Turn ignition switch ON. Press the front brake hand lever. Check operation of brake lamp.

⚠WARNING

After repairing the brake system, test brakes at low speed. If brakes are not operating properly, testing at high speeds can cause loss of control, which could result in death or serious injury. (00289a)

24. Test ride motorcycle. Repeat the bleeding procedure if brakes feel spongy.

NOTE

The sight glass allows a visual check of the brake fluid level without having to remove the master cylinder reservoir cover. Sight glass appears dark if fluid is present.

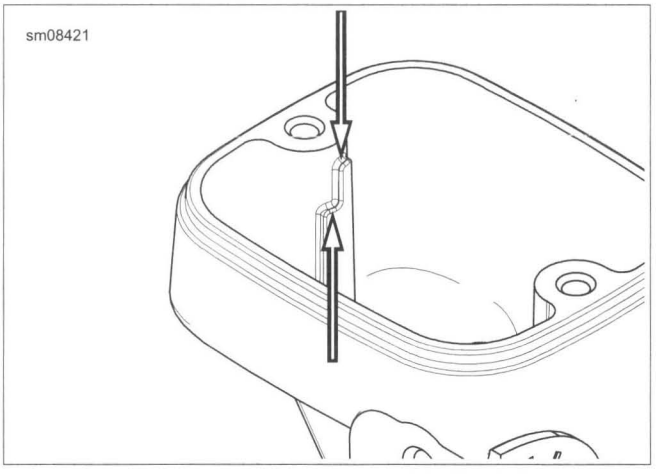

Figure 2-54. FILL Level Boss (front master cylinder)

REMOVAL

⚠CAUTION

Direct contact of D.O.T. 4 brake fluid with eyes can cause irritation. Avoid eye contact. In case of eye contact flush with large amounts of water and get medical attention. Swallowing large amounts of D.O.T. 4 brake fluid can cause digestive discomfort. If swallowed, obtain medical attention. Use in well ventilated area. KEEP OUT OF REACH OF CHILDREN. (00240a)

NOTICE

Avoid leakage. Be sure gaskets, banjo bolt(s), brake line and caliper bore are clean and undamaged before assembly. (00321a)

NOTICE

D.O.T. 4 brake fluid will damage painted and body panel surfaces it comes in contact with. Always use caution and protect surfaces from spills whenever brake work is performed. Failure to comply can result in cosmetic damage. (00239b)

NOTE

If only replacing brake pads, see 1.15 BRAKE PADS AND DISCS.

1. See Figure 2-55. Remove the banjo bolt (1) and both steel/rubber washers (2) to detach brake line (3) from caliper. Discard washers.
2. Remove the upper and lower mounting bolts (4, 5, metric). Lift caliper upward to remove from brake disc.

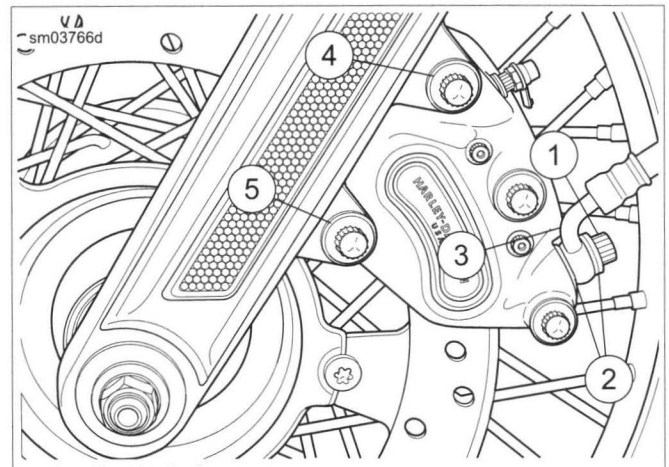

1. **Banjo bolt**
2. **Steel/rubber washer (2)**
3. **Brake line**
4. **Upper mounting bolt (long)**
5. **Lower mounting bolt (short)**

Figure 2-55. Front Caliper

DISASSEMBLY

PART NUMBER	TOOL NAME
HD-48649	FRONT BRAKE CALIPER PISTON REMOVER

1. See Figure 2-56. Remove bridge bolt/pad pin (12) (metric), brake pads (7) and bridge bolt (11) (metric) to separate caliper housings (1, 8).

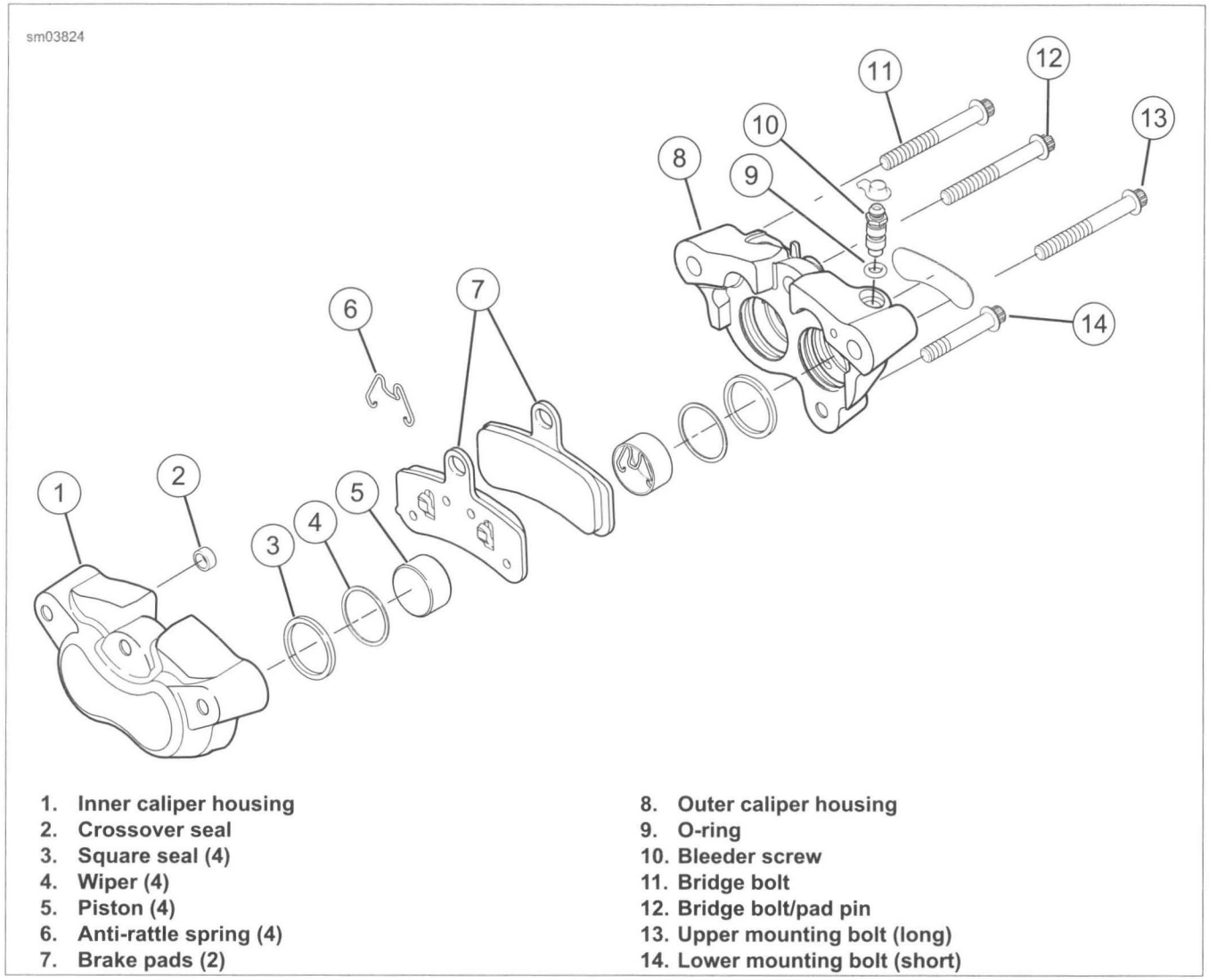

1. **Inner caliper housing**
2. **Crossover seal**
3. **Square seal (4)**
4. **Wiper (4)**
5. **Piston (4)**
6. **Anti-rattle spring (4)**
7. **Brake pads (2)**
8. **Outer caliper housing**
9. **O-ring**
10. **Bleeder screw**
11. **Bridge bolt**
12. **Bridge bolt/pad pin**
13. **Upper mounting bolt (long)**
14. **Lower mounting bolt (short)**

Figure 2-56. Front Brake Caliper

2. If necessary, remove bleeder screw (10).

⚠WARNING

Compressed air can pierce the skin and flying debris from compressed air could cause serious eye injury. Wear safety glasses when working with compressed air. Never use your hand to check for air leaks or to determine air flow rates. (00061a)

3. See Figure 2-57 and Figure 2-58. Remove pistons.
   a. Place FRONT BRAKE CALIPER PISTON REMOVER (Part No. HD-48649) (3) between caliper housings.

   NOTE

   Verify the hole in tool (1) aligns with the cross-over hole in caliper housing (2) in the caliper housings.

   b. Insert two bridge bolts (2) (metric) and tighten securely.
   c. If the bleeder screw was removed, install finger-tight.
   d. Apply low pressure compressed air to banjo bolt hole (1) to remove pistons from caliper bores. Listen for all four pistons to "pop" against the tool.
   e. Remove bridge bolts. Remove tool.
4. Wiggle pistons from caliper bores to remove.
5. If necessary, remove pad springs from each piston.

NOTICE

Avoid leakage. Prevent damage to piston or piston bore. Use non-metallic tools when servicing components. (00529d)

6. See Figure 2-59. Remove and discard cross-over seal (1) from inside caliper housing.
7. Using a wooden toothpick (2), remove a wiper (3) and square seal (4) from each caliper bore. Discard all removed parts.

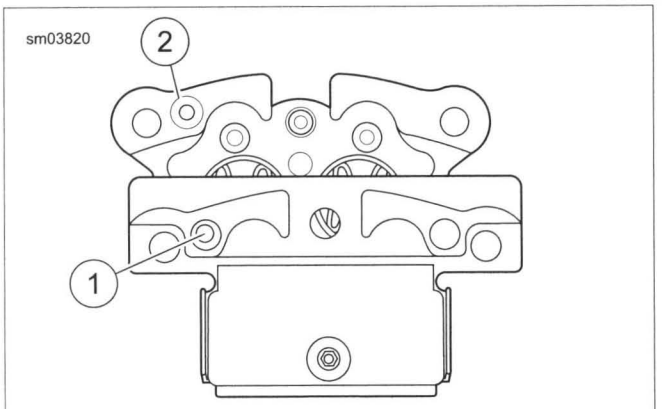

1. Hole in tool
2. Crossover hole in caliper housing

Figure 2-57. Installing Tool

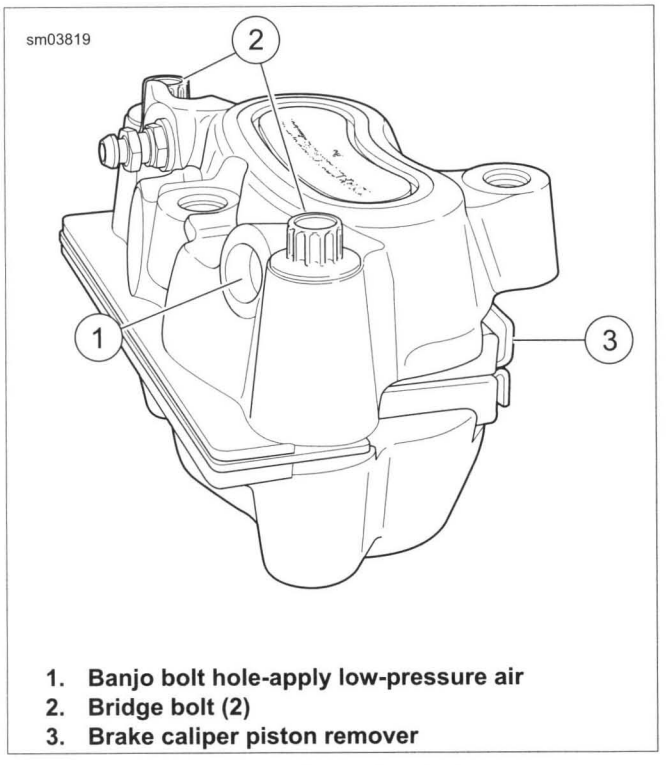

1. Banjo bolt hole-apply low-pressure air
2. Bridge bolt (2)
3. Brake caliper piston remover

Figure 2-58. Removing Pistons

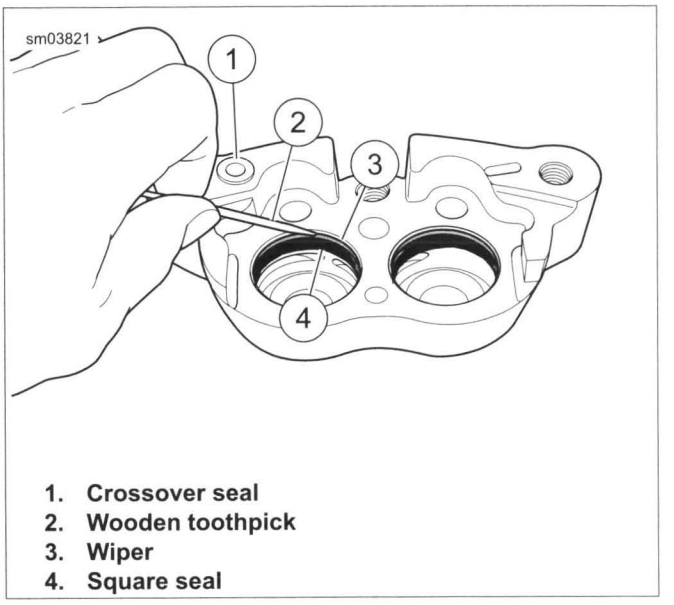

1. Crossover seal
2. Wooden toothpick
3. Wiper
4. Square seal

Figure 2-59. Wipers and Seals

CLEANING, INSPECTION AND REPAIR

⚠WARNING

Use denatured alcohol to clean brake system components. Do not use mineral-based solvents (such as gasoline or paint thinner), which will deteriorate rubber parts even after assembly. Deterioration of these components can cause brake failure, which could result in death or serious injury. (00291a)

⚠WARNING

Compressed air can pierce the skin and flying debris from compressed air could cause serious eye injury. Wear safety glasses when working with compressed air. Never use your hand to check for air leaks or to determine air flow rates. (00061a)

1. Clean all parts with denatured alcohol or DOT 4 BRAKE FLUID. Do not contaminate with mineral oil or other solvents.
2. Wipe parts dry with a clean, lint-free cloth.
3. Clear drilled passages and bore with clean compressed air. Do not use a wire or similar instrument to clean drilled passages.
4. Carefully inspect all components. Replace any parts that appear damaged, worn, or corroded.
   a. Check pistons for pitting, scratches or corrosion on face and also on ground surfaces.
   b. Inspect caliper piston bore. Do not hone bore. If bore shows pitting or corrosion, replace caliper.
   c. Inspect pad pin for grooving and wear. Measure the pad pin diameter in an unworn area and then in the area of any grooving or wear. If wear exceeds 0.015 in (0.38 mm), replace both pins.
   d. Always replace wipers, square seals and cross-over seal after disassembly.

5. If decal on outside housing is removed, scrape remaining adhesive from surface with a razor blade.
6. Inspect brake pads and brake disc. See 1.15 BRAKE PADS AND DISCS.

ASSEMBLY

FASTENER	TORQUE VALUE	
Brake caliper bleeder screw	80-100 **in-lbs**	9.0-11.3 Nm
Brake caliper bridge bolt, front	28-38 ft-lbs	38.0-51.5 Nm
Brake bridge bolt/pad pin, front caliper	15-16 ft-lbs	20.3-22.6 Nm

NOTE

Do not use DOT 4 BRAKE FLUID for lubrication. Use of DOT 4 BRAKE FLUID will result in increased lever travel.

1. Lubricate the following parts before assembly using a light coat of G.E. VERSILUBE #G322 L SILICONE GREASE (marked "Piston Lube") from the service parts kit. All other surfaces must be dry for assembly.
   a. Lubricate nose radius and outside diameter of piston. Apply lube to inside of caliper piston bores.
   b. Apply lube to inside diameter of seals and wipers.

NOTICE

Avoid leakage. Prevent damage to piston or piston bore. Use non-metallic tools when servicing components. (00529d)

2. See Figure 2-56. Install a **new** square seal (3) and a **new** wiper (4) into each piston bore. Use a wooden toothpick to aid installation, if needed.
3. See Figure 2-60. Install pad spring (2) in each piston. Verify that spring is securely installed in the groove in the piston.
4. Turn the piston so the pad spring (2) is oriented as shown. Carefully insert pistons, by hand, into bores of both caliper housings. Press pistons squarely into place until they bottom in the bores. If installation shows resistance, remove piston and check that seals and wipers are properly installed.
5. Place a **new** crossover seal (1) on inside caliper housing.
6. Assemble caliper housings.
   a. Install bleeder screw. Tighten to 80-100 **in-lbs** (9.0-11.3 Nm).
   b. Verify that **new** crossover seal is installed on inside caliper housing.
   c. See Figure 2-56. Mate inside and outside caliper housings using bridge bolt (11) and upper mounting bolt (long) (13) (metric).
   d. Tighten bridge bolt to 28-38 ft-lbs (38.0-51.5 Nm).

⚠WARNING

Always replace brake pads in complete sets for correct and safe brake operation. Improper brake operation could result in death or serious injury. (00111a)

NOTES

- *See Figure 2-61. Verify the pad spring tabs (1) on brake pad engage the pad springs in the pistons.*
- *If the directional tab (2) does not face down when caliper is installed, brake noise may develop.*

7. Install **new** pads into caliper. The directional tab (2) must face down when caliper is installed.
8. See Figure 2-56. Install pad pin/bridge bolt (12) (metric). Tighten to 15-16 ft-lbs (20.3-22.6 Nm).

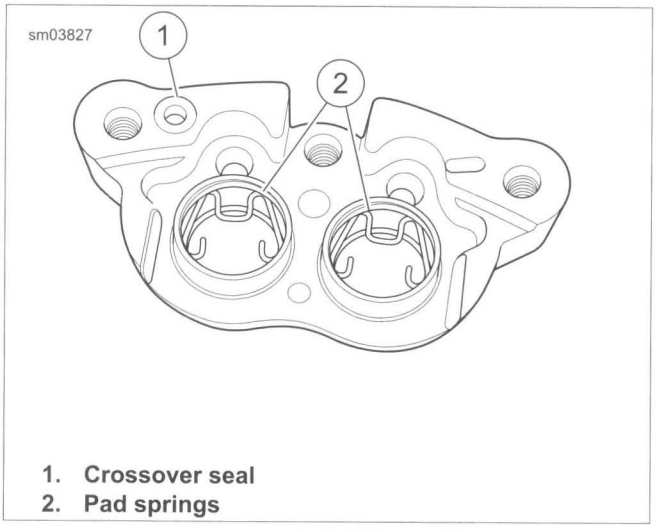

1. **Crossover seal**
2. **Pad springs**

Figure 2-60. Front Caliper Pad Springs

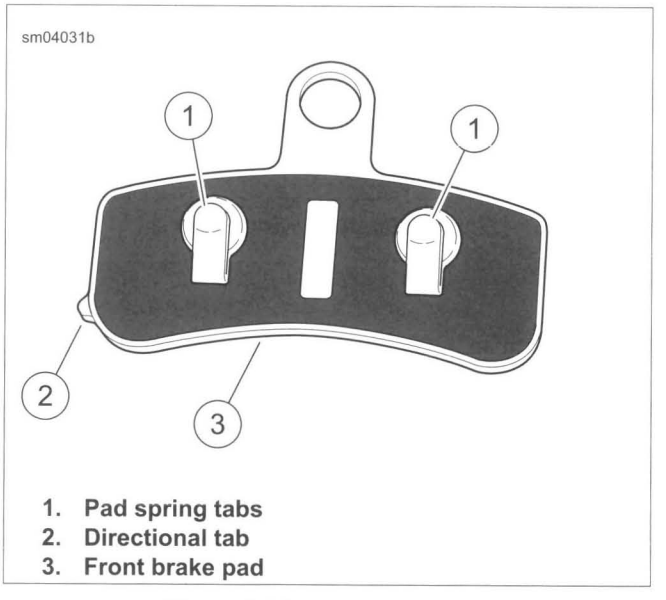

1. **Pad spring tabs**
2. **Directional tab**
3. **Front brake pad**

Figure 2-61. Front Brake Pad

INSTALLATION

FASTENER	TORQUE VALUE	
Front brake caliper lower mounting bolt	28-38 ft-lbs	38.0-51.5 Nm
Front brake caliper upper mounting bolt	28-38 ft-lbs	38.0-51.5 Nm
Front caliper banjo bolt	17-22 ft-lbs	23.1-29.9 Nm
Master cylinder reservoir cover screws: front cover	6-8 **in-lbs**	0.7-0.9 Nm

1. See Figure 2-62. Attach caliper to fork leg.
   a. Place caliper over brake disc with bleeder screw facing upwards.
   b. **ABS models:** Install wheel speed sensor cable retainer when installing caliper to front fork.
   c. Loosely install upper mounting bolt (4) (metric) into top hole on fork leg.
   d. Install lower mounting bolt (5) (metric) into bottom hole on fork leg. Tighten bottom mounting bolt to 28-38 ft-lbs (38.0-51.5 Nm).
   e. Final tighten the top mounting bolt to 28-38 ft-lbs (38.0-51.5 Nm).

NOTICE

Avoid leakage. Be sure gaskets, banjo bolt(s), brake line and master cylinder bore are clean and undamaged before assembly. (00322a)

2. Lubricate **new** steel/rubber washers with DOT 4 BRAKE FLUID. Connect the brake line (3) to caliper using two **new** steel/rubber washers (2) and banjo bolt (1). Tighten to 17-22 ft-lbs (23.1-29.9 Nm).

⚠CAUTION

Direct contact of D.O.T. 4 brake fluid with eyes can cause irritation. Avoid eye contact. In case of eye contact flush with large amounts of water and get medical attention. Swallowing large amounts of D.O.T. 4 brake fluid can cause digestive discomfort. If swallowed, obtain medical attention. Use in well ventilated area. KEEP OUT OF REACH OF CHILDREN. (00240a)

3. Remove cover from front brake master cylinder. Fill master cylinder with DOT 4 BRAKE FLUID. Verify that fluid level is 1/8-3/8 in (3.2-9.5 mm) below top of reservoir with master cylinder in a level position.

⚠WARNING

After servicing brakes and before moving motorcycle, pump brakes to build brake system pressure. Insufficient pressure can adversely affect brake performance, which could result in death or serious injury. (00279a)

⚠WARNING

When any hydraulic brake component, line or connection is loosened or replaced on an ABS motorcycle, Digital Technician II must be used during the brake bleeding procedure to verify all air is removed from the system. Failure to properly bleed the brake system could adversely affect braking, which could result in death or serious injury. (00585c)

4. Bleed brake system. See 2.16 BLEEDING BRAKES.

⚠WARNING

A plugged or covered relief port can cause brake drag or lock-up, which could lead to loss of control, resulting in death or serious injury. (00288a)

5. Check proper operation of the master cylinder relief port by actuating the brake pedal or lever with the cover removed. A slight spurt of fluid will break the fluid surface in the reservoir if internal components are working properly.
6. Install gasket and cover on master cylinder with screws. Tighten to 6-8 **in-lbs** (0.7-0.9 Nm).

⚠WARNING

After repairing the brake system, test brakes at low speed. If brakes are not operating properly, testing at high speeds can cause loss of control, which could result in death or serious injury. (00289a)

7. Test brakes.
   a. Turn ignition switch ON. Apply brakes to check proper lamp operation.
   b. Test ride motorcycle. Repeat the bleeding procedure if brakes feel spongy. See 2.16 BLEEDING BRAKES.

NOTE

*Avoid making hard stops for the first 100 miles (160 km). This procedure allows the **new** pads to become conditioned to the brake discs.*

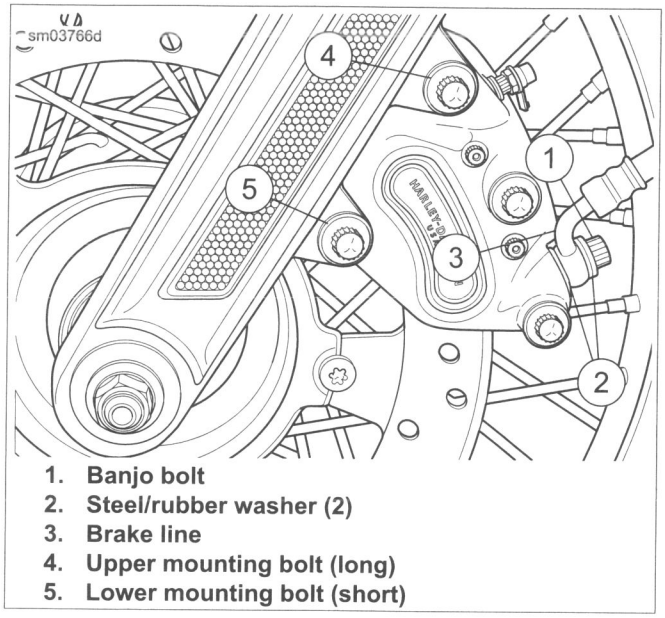

1. Banjo bolt
2. Steel/rubber washer (2)
3. Brake line
4. Upper mounting bolt (long)
5. Lower mounting bolt (short)

Figure 2-62. Front Caliper

REMOVAL

⚠CAUTION

Direct contact of D.O.T. 4 brake fluid with eyes can cause irritation. Avoid eye contact. In case of eye contact flush with large amounts of water and get medical attention. Swallowing large amounts of D.O.T. 4 brake fluid can cause digestive discomfort. If swallowed, obtain medical attention. Use in well ventilated area. KEEP OUT OF REACH OF CHILDREN. (00240a)

NOTICE

D.O.T. 4 brake fluid will damage painted and body panel surfaces it comes in contact with. Always use caution and protect surfaces from spills whenever brake work is performed. Failure to comply can result in cosmetic damage. (00239b)

NOTICE

Do not allow dirt or debris to enter the master cylinder reservoir. Dirt or debris in the reservoir can cause improper operation and equipment damage. (00205c)

1. See Figure 2-63 or Figure 2-64. Remove banjo bolt (14) and gaskets (13). Discard washers.
2. Remove jamnut (12).
3. Loosen jamnut (22) on rod (23 or 24).
4. Unscrew pushrod (9) from brake rod.

NOTE

Use a wrench on pushrod flats if necessary.

5. Raise pedal to move master cylinder/reservoir forward and out of frame bracket.

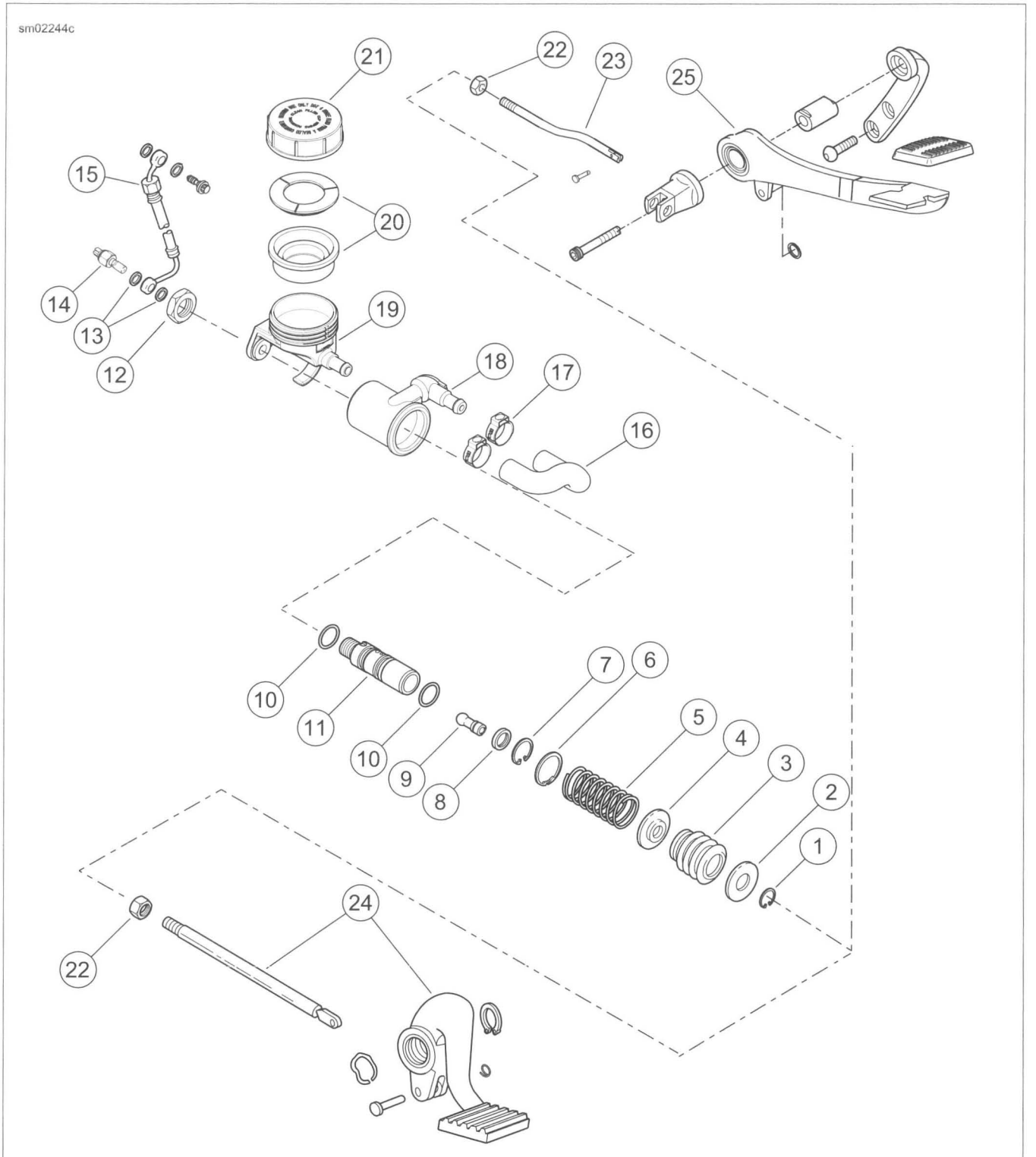

1. Retaining ring
2. Washer
3. Boot
4. Spring retainer
5. Spring
6. Retaining ring
7. Retaining ring
8. Washer
9. Pushrod
10. Cartridge body O-ring (2)
11. Cartridge body
12. Jamnut
13. Sealing washer (2)
14. Banjo bolt
15. Brake line
16. Hose
17. Clamp (2)
18. Housing
19. Reservoir
20. Cover gasket assembly
21. Cap
22. Jamnut
23. Pushrod (FXDWG, FXDF)
24. Brake lever assembly (all but FXDWG, FXDF)
25. Brake pedal (FXDWG, FXDF)

Figure 2-63. Rear Brake Master Cylinder: All But FLD, ABS Only

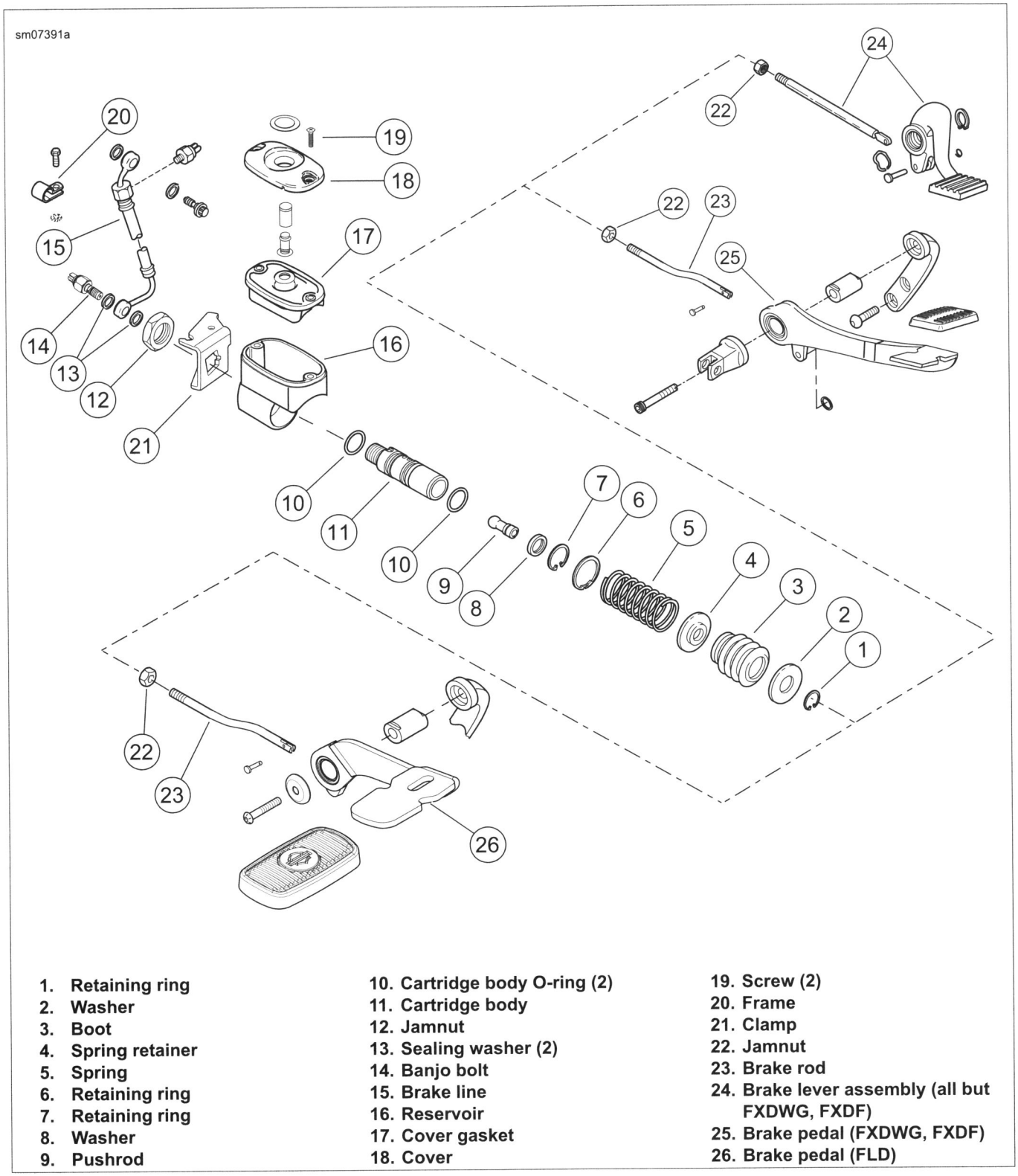

1. **Retaining ring**
2. **Washer**
3. **Boot**
4. **Spring retainer**
5. **Spring**
6. **Retaining ring**
7. **Retaining ring**
8. **Washer**
9. **Pushrod**
10. **Cartridge body O-ring (2)**
11. **Cartridge body**
12. **Jamnut**
13. **Sealing washer (2)**
14. **Banjo bolt**
15. **Brake line**
16. **Reservoir**
17. **Cover gasket**
18. **Cover**
19. **Screw (2)**
20. **Frame**
21. **Clamp**
22. **Jamnut**
23. **Brake rod**
24. **Brake lever assembly (all but FXDWG, FXDF)**
25. **Brake pedal (FXDWG, FXDF)**
26. **Brake pedal (FLD)**

Figure 2-64. Rear Brake Master Cylinder: FLD (ABS and non-ABS) and All Other Non-ABS Models

DISASSEMBLY

1. Wash exterior of master cylinder/reservoir with a clean, nonflammable solvent.
2. See Figure 2-63 or Figure 2-64. Thread banjo bolt (14) into the cartridge body (11).
3. Remove boot (3) from groove in master cylinder/reservoir.
4. Set master cylinder/reservoir upright with banjo bolt resting on bench. Push master cylinder/reservoir down and off the cartridge body.
5. Protect cartridge body from dirt or grease.
6. Press down on washer (2) to compress spring (5). Remove retaining ring (1) from groove in pushrod (9).

7. Carefully release spring and remove washer, boot, spring retainer (4) (inside boot) and spring.
8. Remove and discard retaining ring (7) from bore of cartridge body and remove pushrod and washer (8).

NOTE

Do not disassemble cartridge body (11). Cartridge body components are not sold separately. Replace cartridge body if piston seal leaks.

CLEANING AND INSPECTION

⚠WARNING

Use denatured alcohol to clean brake system components. Do not use mineral-based solvents (such as gasoline or paint thinner), which will deteriorate rubber parts even after assembly. Deterioration of these components can cause brake failure, which could result in death or serious injury. (00291a)

⚠WARNING

Compressed air can pierce the skin and flying debris from compressed air could cause serious eye injury. Wear safety glasses when working with compressed air. Never use your hand to check for air leaks or to determine air flow rates. (00061a)

1. Clean exterior of master cylinder/reservoir with a clean, nonflammable solvent. Lubricate all internal parts with lubricant provided in kit.
2. See Figure 2-63 or Figure 2-64. Inspect reservoir bore for scratches. Replace if scratches are present.
3. Check boot (3) for tears. Replace if any exist.
4. Inspect threads on cartridge body (11), pushrod (9) and banjo bolt (14). Replace any part with damaged threads.
5. Inspect spring for cracks or damaged coils. If any exist, replace spring.
6. Carefully remove O-rings (10) from cartridge body. Do not scratch O-ring grooves. Clean grooves with soft cotton cloth moistened with alcohol. Inspect grooves for scratches and dirt. Remove dirt or replace cartridge body if grooves are scratched.

ASSEMBLY

NOTICE

Avoid leakage. Be sure gaskets, banjo bolt(s), brake line and master cylinder bore are clean and undamaged before assembly. (00322a)

1. See Figure 2-63 or Figure 2-64. Lubricate cartridge body O-rings (10) with DOT 4 BRAKE FLUID. Install in O-ring grooves on cartridge body (11).
2. Lubricate bore of master cylinder/reservoir with DOT 4 BRAKE FLUID.
3. Insert cartridge body into reservoir. Using hand-pressure only, press cartridge body into adapter making sure notch on cartridge body engages lug inside bore of the adapter.
4. Install banjo bolt (14) into cartridge body and stand master cylinder upright with banjo bolt resting on bench.
5. Place washer (8) on pushrod (9).
6. Place a **new** retaining ring (7) on pushrod. Insert ball-end of pushrod into piston. Push piston downward with pushrod until washer is properly seated in the cartridge bore.
7. Install the **new** retaining ring in groove inside cartridge bore. Make sure that retaining ring is fully seated in groove.
8. Release downward pressure on pushrod. Check that pushrod rotates freely.
9. Install retaining ring (6) in groove on cartridge body.
10. Install on pushrod, spring (5), spring retainer (4) (large cupped side toward spring), boot (3) with drain hole down, and washer (2).
11. Press down on washer and install retaining ring (1) in pushrod groove.
12. Seat sealing lip of boot into groove on master cylinder/reservoir adapter.

INSTALLATION

FASTENER	TORQUE VALUE	
Master cylinder mounting nut, rear	30-40 ft-lbs	40.7-54.2 Nm
Banjo bolt to rear master cylinder	17-22 ft-lbs	23.0-29.8 Nm
Master cylinder reservoir rear cover screws: FLD (ABS and non-ABS) and all other non-ABS models	6-8 **in-lbs**	0.68-0.90 Nm

1. See Figure 2-63 or Figure 2-64. Guide threaded end of master cylinder/reservoir through hole in frame bracket. Make sure the square body of the master cylinder/reservoir is engaged in the square hole of the mounting bracket.
2. Install jamnut (12). Tighten to 30-40 ft-lbs (40.7-54.2 Nm).
3. Install pushrod (9) fully onto brake rod (23) or brake lever assembly (24). Do not tighten jamnut (22) now.
4. Lubricate **new** steel/rubber washers (13) with DOT 4 BRAKE FLUID. Install brake line (15) using banjo bolt (14) and **new** steel/rubber washers (13). Tighten banjo bolt to 17-22 ft-lbs (23.0-29.8 Nm).

⚠WARNING

After servicing brakes and before moving motorcycle, pump brakes to build brake system pressure. Insufficient pressure can adversely affect brake performance, which could result in death or serious injury. (00279a)

⚠WARNING

When adjusting brake control rod, never allow more than nine threads to be exposed between control rod and jam nut. If more than nine threads are exposed, brake rod can come apart resulting in loss of rear brake, which could cause death or serious injury. (00306c)

5. Tighten jamnut after adjustment. Verify that no more than nine threads are visible on brake rod.
6. Verify that water drain hole in boot (3) is positioned at bottom.

⚠WARNING

When any hydraulic brake component, line or connection is loosened or replaced on an ABS motorcycle, Digital Technician II must be used during the brake bleeding procedure to verify all air is removed from the system. Failure to properly bleed the brake system could adversely affect braking, which could result in death or serious injury. (00585c)

NOTE

Brake pedal free play is built into master cylinder. No adjustment is required. When pedal is pushed down with hand, a small amount of free play must be felt.

7. Bleed brake system. See 2.16 BLEEDING BRAKES.
8. **All ABS models but FLD:** See Figure 2-63. Install cover gasket assembly (20) and cap (21). Tighten cap securely.
9. **FLD (ABS and non-ABS) and all other non-ABS models:** See Figure 2-64. Install cover gasket (17) and cover (18) on master cylinder/reservoir. Tighten cover screws to 6-8 **in-lbs** (0.68-0.90 Nm).

⚠WARNING

After repairing the brake system, test brakes at low speed. If brakes are not operating properly, testing at high speeds can cause loss of control, which could result in death or serious injury. (00289a)

10. Test brakes.
    a. Turn ignition switch ON. Apply brakes to check proper lamp operation.
    b. Test ride motorcycle. Repeat the bleeding procedure if brakes feel spongy. See 2.16 BLEEDING BRAKES.

NOTE

See Figure 2-64. A sight glass in cover (18) enables the rider to check the brake fluid level without removing the master cylinder cover. Sight glass appears dark if fluid is present. As the fluid level drops, the glass appears lighter to indicate this condition to the rider. Sight glass is included on:

- *All Non-ABS models*
- *All FLD ABS models*

REMOVAL

NOTICE

D.O.T. 4 brake fluid will damage painted and body panel surfaces it comes in contact with. Always use caution and protect surfaces from spills whenever brake work is performed. Failure to comply can result in cosmetic damage. (00239b)

NOTE

If only replacing brake pads, do not remove rear brake caliper. If pad replacement is necessary, see 1.15 BRAKE PADS AND DISCS.

1. See Figure 2-65. Remove the banjo bolt (1) and both steel/rubber washers (2) to detach rear brake line from caliper. Discard washers.
2. Remove both the slider pin (3) and mounting bolt (4) (metric). Remove caliper assembly from brake disc.
3. To remove rear caliper mount:
   a. Remove axle from rear wheel. See 2.5 REAR WHEEL.
   b. Lift rear caliper mount away from axle and rear fork. Notch in caliper mount must clear tab on rear fork.

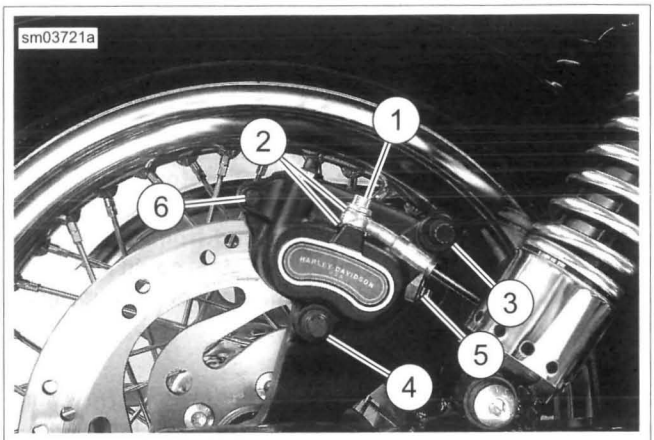

1. **Banjo bolt**
2. **Steel/rubber washer (2)**
3. **Slider pin**
4. **Mounting bolt**
5. **Tab slot**
6. **Pad pin**

Figure 2-65. Rear Caliper

DISASSEMBLY

PART NUMBER	TOOL NAME
HD-48648	BRAKE CALIPER PISTON REMOVER

1. See Figure 2-66. Remove pad pin (3) and brake pads (12).
2. If necessary, remove bleeder screw (4).

NOTE

If phenolic insulators (8) are loose, remove from pistons.

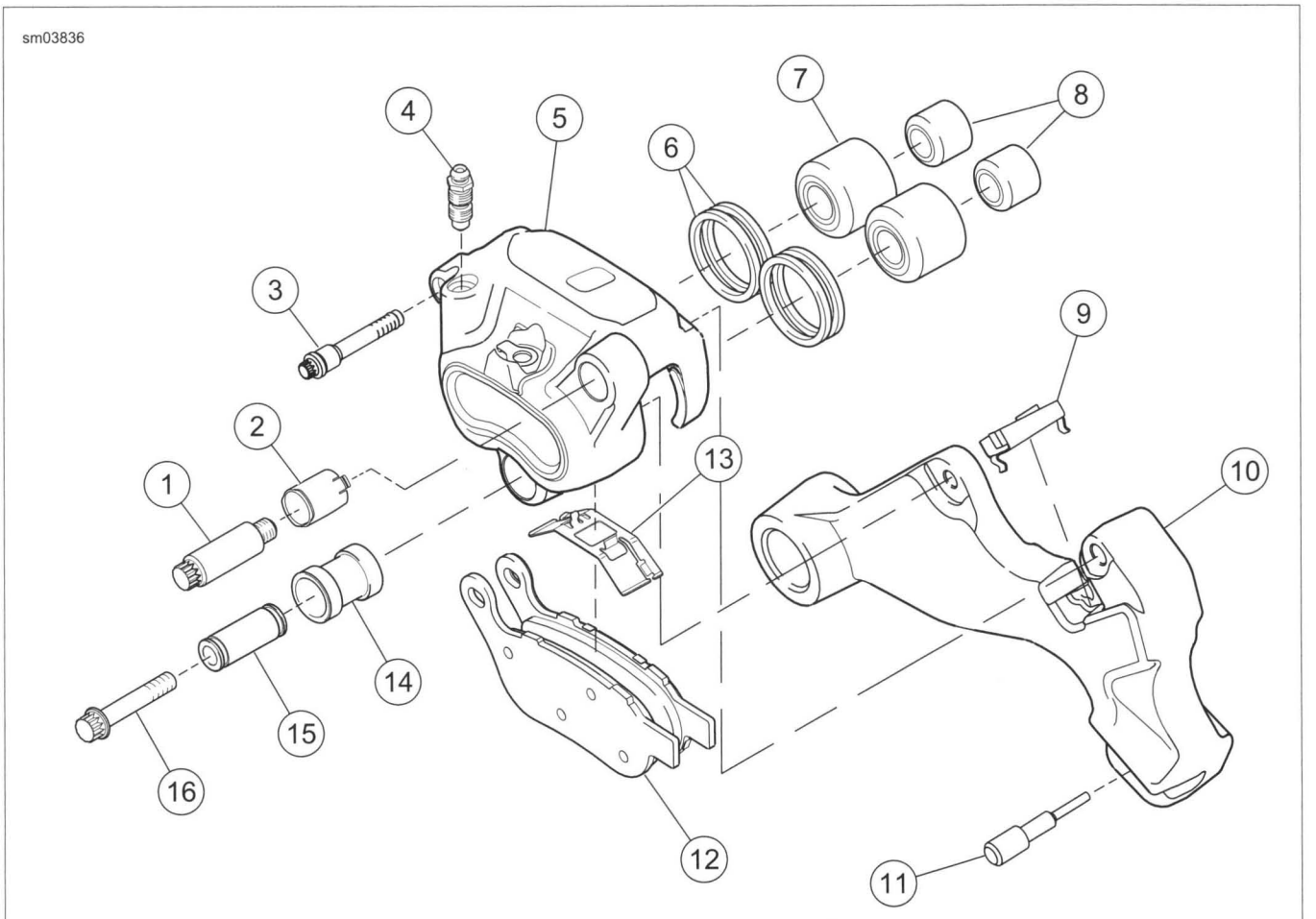

1. **Slider pin**
2. **Bushing (upper)**
3. **Pad pin**
4. **Bleeder screw with O-ring**
5. **Caliper housing**
6. **Square seals (4)**
7. **Piston (2)**
8. **Phenolic insulator (available only in repair kit)**
9. **Torque clip**
10. **Rear caliper mount**
11. **Rubber bumper**
12. **Brake pads (2)**
13. **Anti-rattle spring**
14. **Rubber boot**
15. **Bushing (lower)**
16. **Mounting bolt**

Figure 2-66. Rear Brake Caliper

⚠WARNING

Compressed air can pierce the skin and flying debris from compressed air could cause serious eye injury. Wear safety glasses when working with compressed air. Never use your hand to check for air leaks or to determine air flow rates. (00061a)

⚠CAUTION

When removing piston with compressed air, piston can develop considerable force and fly out of caliper bore. Keep hands away from piston to avoid possible injury. (00530b)

NOTE

Reuse phenolic insulators unless damaged.

3. See Figure 2-67. Remove pistons.
   a. Place BRAKE CALIPER PISTON REMOVER (Part No. HD-48648) (3) into caliper housing. Install bolt (2) finger-tight.

   NOTE

   Do not use a wrench to tighten remover retaining bolt (2).

   b. If the bleeder screw was removed, install it finger-tight.
   c. Apply low pressure compressed air to banjo bolt hole (1) to remove pistons from caliper bores. Listen for both pistons to "pop" against the tool.
   d. Remove piston remover tool.
4. Wiggle pistons to remove them completely from caliper bores.

NOTICE

Avoid leakage. Prevent damage to piston or piston bore. Use non-metallic tools when servicing components. (00529d)

5. See Figure 2-68. Using a wooden toothpick (1), remove two square seals (2) from each caliper bore. Discard all removed parts.
6. Pull anti-rattle spring (3) straight out to remove.

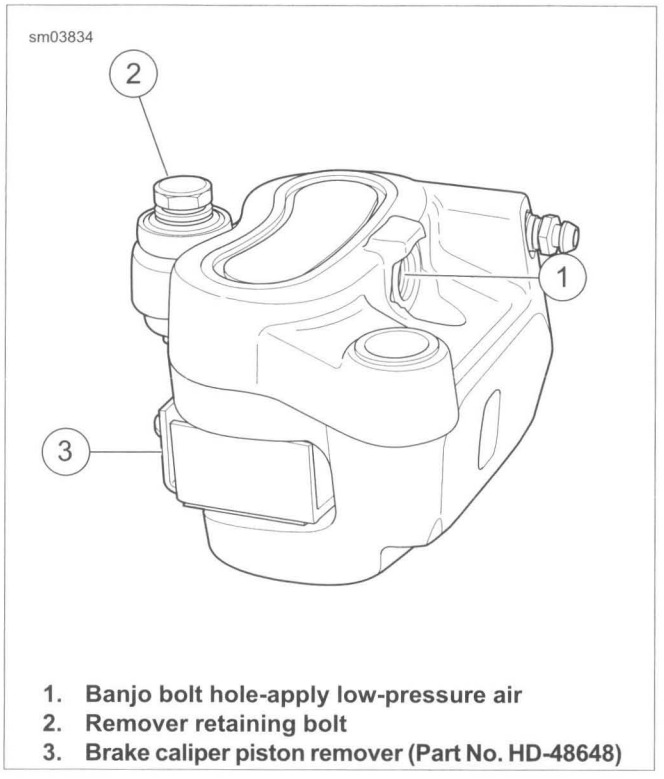

1. **Banjo bolt hole-apply low-pressure air**
2. **Remover retaining bolt**
3. **Brake caliper piston remover (Part No. HD-48648)**

Figure 2-67. Removing Pistons

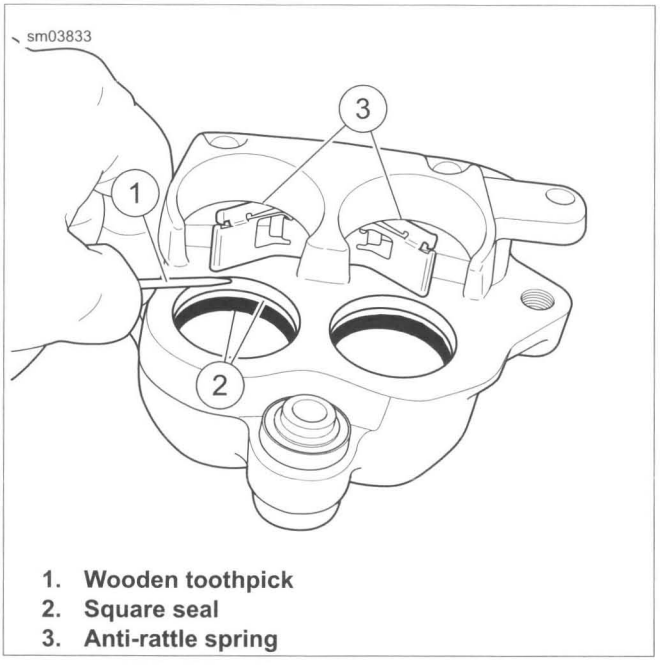

1. **Wooden toothpick**
2. **Square seal**
3. **Anti-rattle spring**

Figure 2-68. Seals and Spring

CLEANING, INSPECTION AND REPAIR

WARNING

Use denatured alcohol to clean brake system components. Do not use mineral-based solvents (such as gasoline or paint thinner), which will deteriorate rubber parts even after assembly. Deterioration of these components can cause brake failure, which could result in death or serious injury. (00291a)

WARNING

Compressed air can pierce the skin and flying debris from compressed air could cause serious eye injury. Wear safety glasses when working with compressed air. Never use your hand to check for air leaks or to determine air flow rates. (00061a)

1. Clean all parts with denatured alcohol or DOT 4 BRAKE FLUID. Do not contaminate with mineral oil or other solvents. Wipe parts dry with a clean, lint-free cloth. Clear drilled passages and bore with clean compressed air. Do not use a wire or similar instrument to clean drilled passages.
2. Inspect parts for wear or damage. Replace parts if necessary.
   a. Check pistons for pitting, scratches or corrosion on face and also on ground surfaces.
   b. Inspect phenolic insulators for damage.
   c. Inspect caliper piston bore. Do not hone bore. If bore shows pitting or corrosion, replace caliper.
   d. Inspect pad pin for grooving and wear. Measure the pad pin diameter in an unworn area. Then measure in the area of any grooving or wear. If wear exceeds 0.015 in (0.38 mm), replace both pins.
   e. See Figure 2-66. Inspect rubber boot (14) for cracks and damage. Inspect bushing (15) for free movement. Inspect bushing (2) for free movement or damage.
   f. Always replace square seals after disassembly.
3. If decal on outside housing is removed, scrape remaining adhesive from surface with a razor blade.
4. Inspect brake pads and brake disc. See 1.15 BRAKE PADS AND DISCS.

ASSEMBLY

FASTENER	TORQUE VALUE	
Brake caliper bleeder screw	80-100 **in-lbs**	9.0-11.3 Nm
Brake pad pin, rear caliper	80-120 **in-lbs**	9.0-13.6 Nm

NOTE

Do not use DOT 4 BRAKE FLUID for lubrication. Use of DOT 4 BRAKE FLUID increases lever travel.

1. Lubricate the following parts before assembly using the lubricant supplied in the service parts kit. All other surfaces must be dry for assembly.
   a. Lubricate nose radius and outside diameter of piston. Apply lube to inside of caliper piston bores.
   b. Apply lube to inside diameter of square seals.

NOTICE

Avoid leakage. Prevent damage to piston or piston bore. Use non-metallic tools when servicing components. (00529d)

2. See Figure 2-68. Install two **new** square seals (2) into each piston bore. Use a wooden toothpick (1) to aid installation if needed.
3. Install anti-rattle spring (3). Verify that it is positioned correctly.
4. Carefully insert pistons, by hand, into bores of caliper housing. Press pistons squarely into place until they bottom in the bores. If installation shows resistance, remove piston. Check that seals are properly installed.
5. See Figure 2-66. Install bleeder screw with O-ring (4) in caliper housing, if removed. Tighten to 80-100 **in-lbs** (9.0-11.3 Nm).

NOTE

Verify phenolic insulators (8) are in place before installing brake pads.

6. Insert brake pads into caliper with friction material facing opening for brake disc.
7. Install pad pin (3). Tighten to 80-120 **in-lbs** (9.0-13.6 Nm).

NOTE

If pad pins do not fit, check the following:

- *A set of pads are installed, not two identical pads.*
- *Anti-rattle spring orientation matches Figure 2-66.*

INSTALLATION

FASTENER	TORQUE VALUE	
Brake caliper mounting bolt, rear	120-168 **in-lbs**	13.6-18.9 Nm
Rear caliper banjo bolt	17-22 ft-lbs	23.1-29.9 Nm

1. Install rear axle and caliper mount, if removed. Verify notch in mount engages tab on rear fork. See 2.5 REAR WHEEL.
2. See Figure 2-66. Verify torque clip (9) is in place in caliper mount.
3. See Figure 2-65. Install caliper with pads on caliper mount. Tighten slider pin (3) and mounting bolt (4) (metric) to 120-168 **in-lbs** (13.6-18.9 Nm). Verify tabs on brake pads engage tab slot (5) in caliper mount.

NOTICE

Avoid leakage. Be sure gaskets, banjo bolt(s), brake line and caliper bore are clean and undamaged before assembly. (00321a)

4. Lubricate **new** sealing washers with DOT 4 BRAKE FLUID. Connect the brake line to caliper using two **new** sealing washers (2) and banjo bolt (1). Tighten to 17-22 ft-lbs (23.1-29.9 Nm).

⚠CAUTION

Direct contact of D.O.T. 4 brake fluid with eyes can cause irritation. Avoid eye contact. In case of eye contact flush with large amounts of water and get medical attention. Swallowing large amounts of D.O.T. 4 brake fluid can cause digestive discomfort. If swallowed, obtain medical attention. Use in well ventilated area. KEEP OUT OF REACH OF CHILDREN. (00240a)

5. Remove cover from rear brake master cylinder. Fill master cylinder with DOT 4 BRAKE FLUID. Verify that fluid level is 1/4-1/2 in (6.4-12.7 mm) below top of reservoir with master cylinder in a level position.

⚠WARNING

When any hydraulic brake component, line or connection is loosened or replaced on an ABS motorcycle, Digital Technician II must be used during the brake bleeding procedure to verify all air is removed from the system. Failure to properly bleed the brake system could adversely affect braking, which could result in death or serious injury. (00585c)

⚠WARNING

After servicing brakes and before moving motorcycle, pump brakes to build brake system pressure. Insufficient pressure can adversely affect brake performance, which could result in death or serious injury. (00279a)

6. Bleed brake system. See 2.16 BLEEDING BRAKES.

⚠WARNING

After repairing the brake system, test brakes at low speed. If brakes are not operating properly, testing at high speeds can cause loss of control, which could result in death or serious injury. (00289a)

7. Test brakes.
   a. Turn ignition switch ON. Check operation of rear lamps.
   b. Test ride motorcycle. Repeat the bleeding procedure if brakes feel spongy. See 2.16 BLEEDING BRAKES.

NOTE

*Avoid making hard stops for the first 100 miles (160 km). This procedure allows the **new** pads to become conditioned to the brake discs.*

FRONT MASTER CYLINDER TO FRONT CALIPER LINE ASSEMBLY

PART NUMBER	TOOL NAME
HD-48650	DIGITAL TECHNICIAN II
SNAP-ON BB200A	BASIC VACUUM BRAKE BLEEDER

FASTENER	TORQUE VALUE	
Banjo bolt to front master cylinder	17-22 ft-lbs	23.0-29.8 Nm
Front brake line manifold fastener	36-48 **in-lbs**	4.1-5.4 Nm
Banjo bolt to front caliper	17-22 ft-lbs	23.0-29.8 Nm
ABS brake line flare nuts	120-144 **in-lbs**	13.6-16.3 Nm

Removal

NOTE

See Figure 2-69. The front master cylinder to manifold brake line, manifold and manifold to front caliper brake line must be replaced as an assembly.

1. **ABS models:** Remove cable straps securing WSS harness to front brake line.

NOTE

For best results, use the BASIC VACUUM BRAKE BLEEDER (Part No. Snap-on BB200A) or equivalent tool to drain the brake systems.

2. Drain front brake system.

NOTE

Wrap banjo fittings with pieces of lint-free shop towel to absorb any loss of brake fluid.

3. Remove banjo bolt from master cylinder reservoir. Discard sealing washers.
4. Remove banjo bolt securing brake line to caliper. Discard sealing washers.
5. **ABS models:** See Figure 2-69. Disconnect ABS module to front manifold brake lines (4) from manifold (5).
6. Remove front brake line manifold to lower fork bracket fastener (6).
7. Remove brake line assembly.

Installation

1. Secure brake line with **new** sealing washers to master cylinder. Tighten banjo bolt to 17-22 ft-lbs (23.0-29.8 Nm).
2. See Figure 2-69. Secure front brake line manifold (5) and tighten front manifold to lower fork bracket fastener (6) to 36-48 **in-lbs** (4.1-5.4 Nm).
3. Install brake line to front caliper with banjo bolt and **new** sealing washers. Tighten to 17-22 ft-lbs (23.0-29.8 Nm). Repeat for models with dual front calipers.
4. **ABS models:** Install ABS module to front manifold brake lines (4) to manifold (5). Tighten to 120-144 **in-lbs** (13.6-16.3 Nm).
5. **ABS models:** Secure WSS cable to brake line with cable straps at correct locations. See 7.25 WHEEL SPEED SENSORS.

⚠WARNING

When any hydraulic brake component, line or connection is loosened or replaced on an ABS motorcycle, Digital Technician II must be used during the brake bleeding procedure to verify all air is removed from the system. Failure to properly bleed the brake system could adversely affect braking, which could result in death or serious injury. (00585c)

6. Bleed brake system. See 2.16 BLEEDING BRAKES.
7. To confirm that brake system is properly connected and all air is purged, install master cylinder reservoir cover. Connect motorcycle to DIGITAL TECHNICIAN II (Part No. HD-48650) and perform "ABS Service" procedure.

⚠WARNING

After repairing the brake system, test brakes at low speed. If brakes are not operating properly, testing at high speeds can cause loss of control, which could result in death or serious injury. (00289a)

8. Test brakes.
   a. Check operation of rear brake lamp.
   b. Test ride motorcycle. Repeat the bleeding procedure if brakes feel spongy.

ABS MODULE TO FRONT MANIFOLD BRAKE LINES

PART NUMBER	TOOL NAME
HD-48650	DIGITAL TECHNICIAN II
SNAP-ON BB200A	BASIC VACUUM BRAKE BLEEDER

FASTENER	TORQUE VALUE	
Banjo bolt to ABS module	14-18 ft-lbs	18.9-24.4 Nm
ABS brake line flare nuts	120-144 **in-lbs**	13.6-16.3 Nm

Removal

1. Remove fuel tank. See 4.4 FUEL TANK.
2. Remove battery and battery tray. See 7.10 BATTERY TRAY AND BATTERY CABLES.
3. **Active exhaust:** Remove active exhaust cable. See 7.31 ACTIVE EXHAUST: HDI.

NOTE

For best results, use the BASIC VACUUM BRAKE BLEEDER (Part No. Snap-on BB200A) or equivalent tool to drain the brake systems.

4. Drain front brake system.
5. See Figure 2-70. Cut cable strap (1). Remove anchor from frame.
6. Remove cable strap securing WSS harness to brake lines.

NOTICE

D.O.T. 4 brake fluid will damage painted and body panel surfaces it comes in contact with. Always use caution and protect surfaces from spills whenever brake work is performed. Failure to comply can result in cosmetic damage. (00239b)

NOTE

Wrap banjo fittings with pieces of lint-free shop towel to absorb any loss of brake fluid.

7. See Figure 2-72. Remove banjo bolts from ABS module to front brake line manifold (1) and front master cylinder to ABS module (2). Discard sealing washers.
8. See Figure 2-69. Disconnect brake lines from manifold (5) under the lower fork bracket. Hold suitable container under manifold to allow reservoir to drain.
9. Remove ABS brake lines from frame.

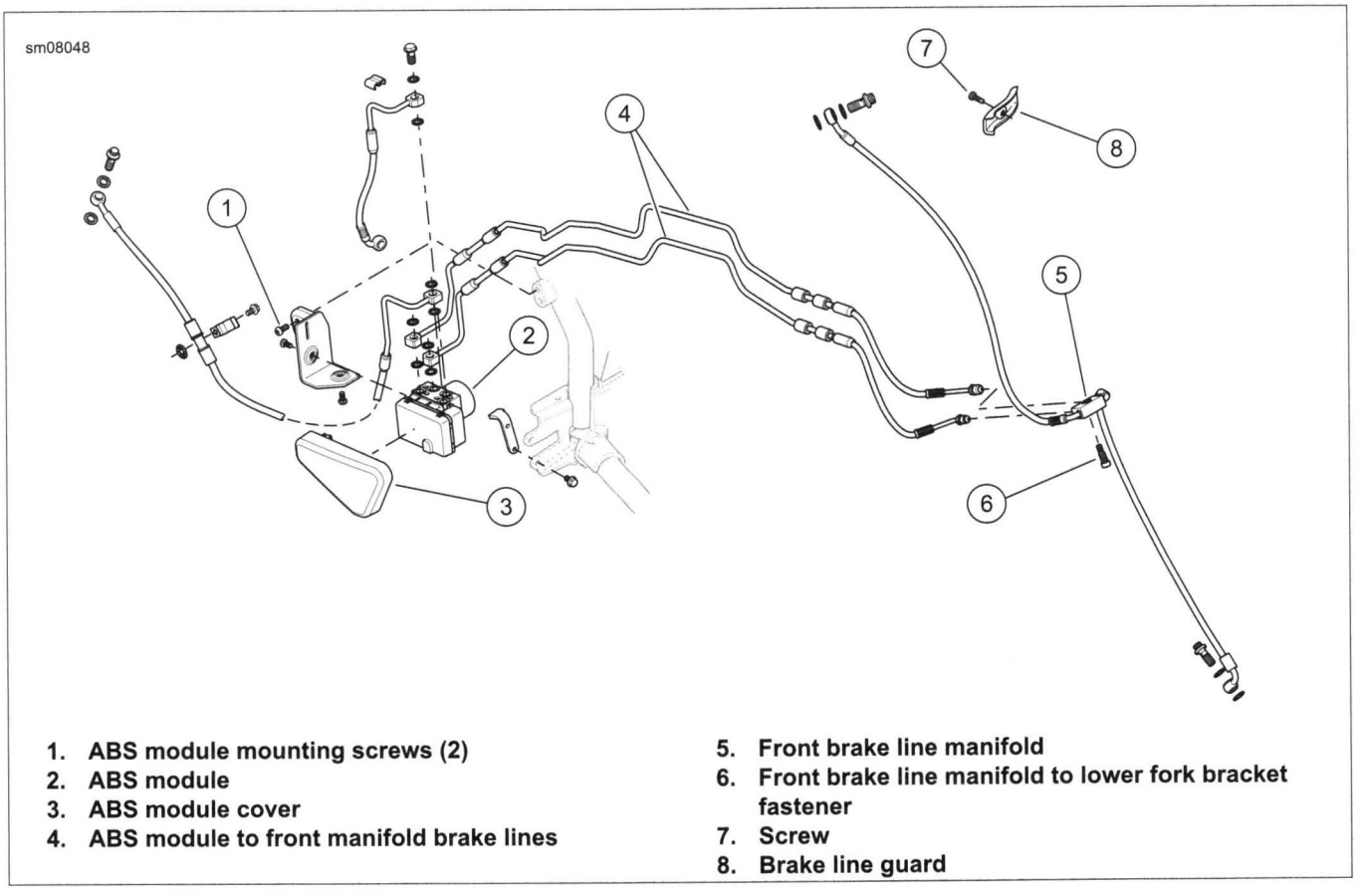

1. **ABS module mounting screws (2)**
2. **ABS module**
3. **ABS module cover**
4. **ABS module to front manifold brake lines**
5. **Front brake line manifold**
6. **Front brake line manifold to lower fork bracket fastener**
7. **Screw**
8. **Brake line guard**

Figure 2-69. ABS Brake System (typical)

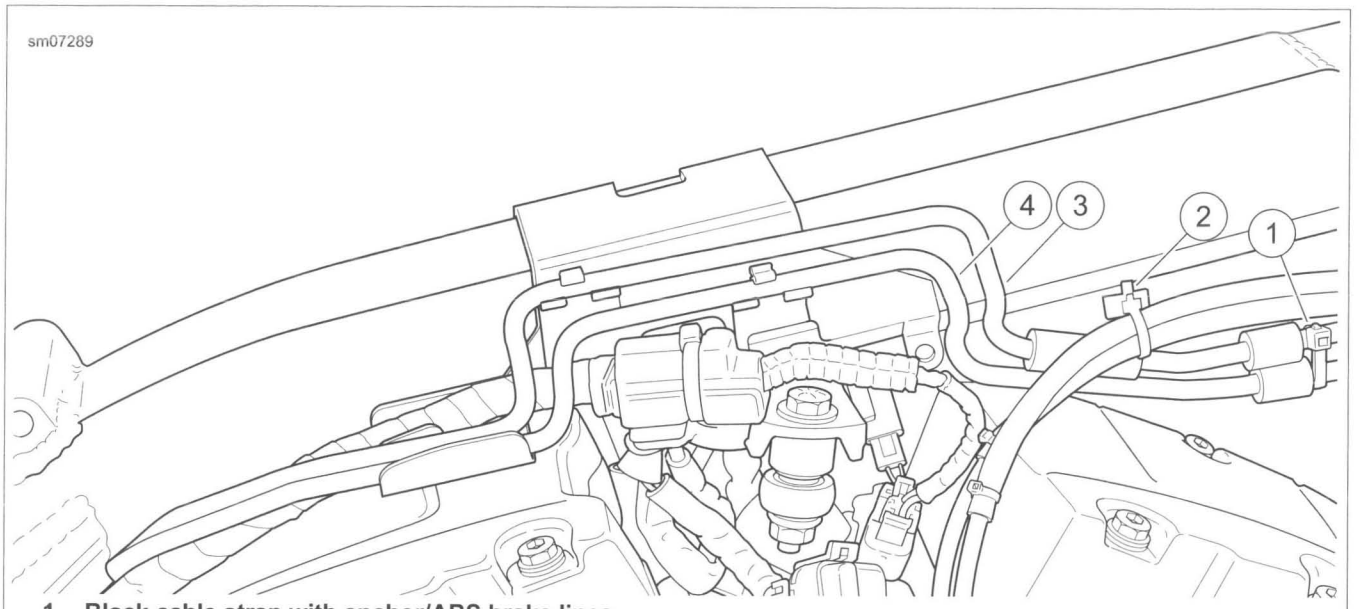

1. Black cable strap with anchor/ABS brake lines
2. White cable strap with anchor/throttle cables
3. ABS brake line from module to front brake line manifold to caliper
4. ABS brake lines from module to front brake line manifold to master cylinder

Figure 2-70. ABS Brake Lines with Anchors

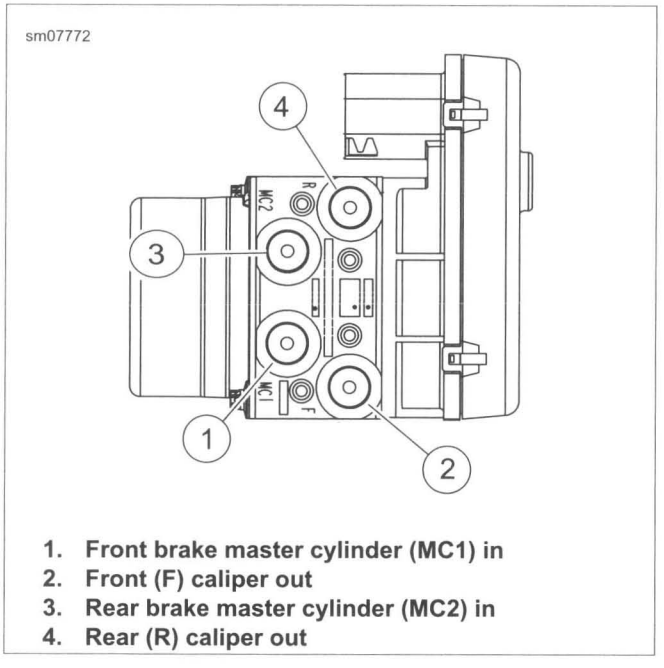

1. Front brake master cylinder (MC1) in
2. Front (F) caliper out
3. Rear brake master cylinder (MC2) in
4. Rear (R) caliper out

Figure 2-71. Brake Fluid Line Connections

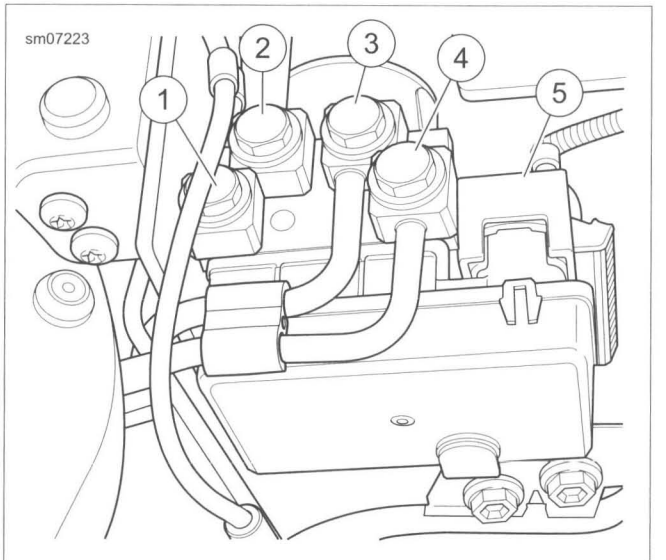

1. ABS module to front brake line manifold (F)
2. Front master cylinder to ABS module (MC 1)
3. Rear master cylinder to ABS module (MC 2)
4. ABS module to rear caliper (R)
5. Electrical connector

Figure 2-72. ABS Module Connections

Installation

1. Route brake lines from ABS module through caddy on frame backbone.

NOTE

See Figure 2-70. Install anchor into frame and cable strap (1) before tightening brake lines at manifold to prevent brake lines from moving when tightening.

2. See Figure 2-70. Install anchor into main frame. Secure lines with cable strap (1).
3. See Figure 2-72. Secure brake lines to ABS module with **new** sealing washers. Tighten to 14-18 ft-lbs (18.9-24.4 Nm).
4. Install brake lines to manifold. Tighten to 120-144 **in-lbs** (13.6-16.3 Nm).
5. Secure rear WSS to brake lines with cable straps.
6. Bleed brake system. See 2.16 BLEEDING BRAKES.
7. Install battery tray and battery. See 7.10 BATTERY TRAY AND BATTERY CABLES and 1.18 BATTERY MAINTENANCE.
8. **Active exhaust:** Install active exhaust cable. See 7.31 ACTIVE EXHAUST: HDI.
9. Install fuel tank. See 4.4 FUEL TANK.

⚠WARNING

When any hydraulic brake component, line or connection is loosened or replaced on an ABS motorcycle, Digital Technician II must be used during the brake bleeding procedure to verify all air is removed from the system. Failure to properly bleed the brake system could adversely affect braking, which could result in death or serious injury. (00585c)

10. To confirm that brake system is properly connected and that all air is purged, connect motorcycle to DIGITAL TECHNICIAN II (Part No. HD-48650) and perform "ABS Service" procedure.

⚠WARNING

After installing seat, pull upward on seat to be sure it is locked in position. While riding, a loose seat can shift causing loss of control, which could result in death or serious injury. (00070b)

11. Install seat.

⚠WARNING

After repairing the brake system, test brakes at low speed. If brakes are not operating properly, testing at high speeds can cause loss of control, which could result in death or serious injury. (00289a)

12. Test brakes.
    a. Apply brakes to check proper lamp operation.
    b. Test ride motorcycle. Repeat the bleeding procedure if brakes feel spongy.

REAR MASTER CYLINDER TO ABS MODULE

PART NUMBER	TOOL NAME
HD-48650	DIGITAL TECHNICIAN II

FASTENER	TORQUE VALUE	
Brake switch/banjo bolt to rear master cylinder	17-22 ft-lbs	23.0-29.8 Nm
Banjo bolt to ABS module	14-18 ft-lbs	18.9-24.4 Nm

Removal

1. Remove seat.
2. **FLD models:** Remove right side saddlebag. See 2.34 SADDLEBAGS: FLD.
3. Drain rear brake fluid.
4. Remove battery and battery tray. See 7.10 BATTERY TRAY AND BATTERY CABLES.
5. **Active exhaust:** Remove active exhaust cable. See 7.31 ACTIVE EXHAUST: HDI.
6. See Figure 2-73. Remove clip from ABS module brake lines.

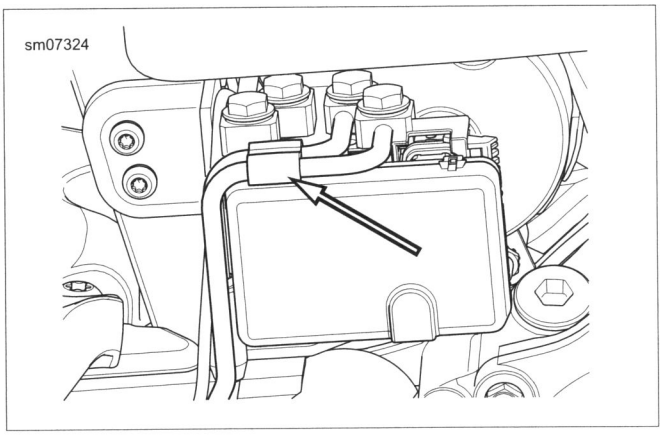

Figure 2-73. Brake Line Clip at ABS Module

7. Remove terminals from rear brake lamp switch.
8. Remove brake switch/banjo bolt from master cylinder reservoir. Hold suitable container under banjo bolt bore and allow reservoir to drain. Discard sealing washers.

NOTE

Wrap banjo fittings with pieces of lint-free shop towel to absorb any loss of brake fluid.

9. See Figure 2-72. Remove banjo bolt at module location (3) to release brake line from ABS module. Discard sealing washers.
10. Remove brake line.

Installation

1. Place rear brake line in approximate installed position.
2. Attach brake line to ABS module with banjo bolt and **new** sealing washers.

3. Attach rear brake line to master cylinder with rear brake switch/banjo bolt and **new** sealing washers. Using flats on rear brake switch/banjo bolt, tighten to 17-22 ft-lbs (23.0-29.8 Nm).
4. Connect terminals onto rear brake lamp switch. If removed, install **new** cable strap to secure rear brake lamp switch wires.

NOTE

See Figure 2-73. Failure to install clip on rear brake lines at ABS module may result in the brake lines rubbing against the rear fork during vehicle operation.

5. See Figure 2-73. Install brake line clip at ABS module.
6. Tighten banjo bolt securing brake line to ABS module to 14-18 ft-lbs (18.9-24.4 Nm).
7. See Figure 2-74. Secure WSS cable to rear brake line with cable straps (2).

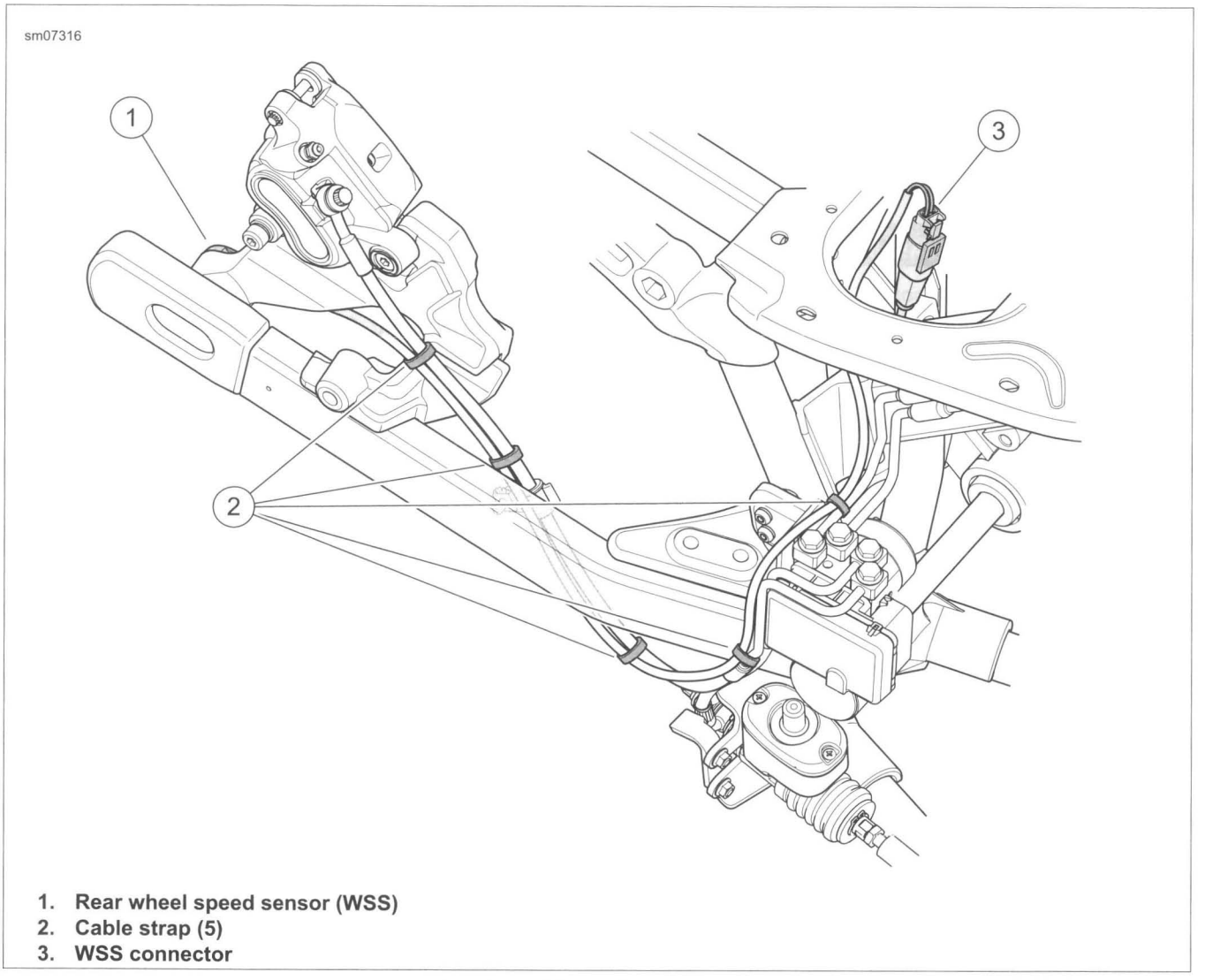

1. **Rear wheel speed sensor (WSS)**
2. **Cable strap (5)**
3. **WSS connector**

Figure 2-74. Rear Wheel Speed Sensor and Cable Routing

8. Bleed brake system. See 2.16 BLEEDING BRAKES.

⚠WARNING

When any hydraulic brake component, line or connection is loosened or replaced on an ABS motorcycle, Digital Technician II must be used during the brake bleeding procedure to verify all air is removed from the system. Failure to properly bleed the brake system could adversely affect braking, which could result in death or serious injury. (00585c)

9. To confirm that brake system is properly connected and all air is purged, install master cylinder reservoir cover. Connect motorcycle to DIGITAL TECHNICIAN II (Part No. HD-48650) and perform "ABS Service" procedure.
10. Install battery tray and battery. See 7.10 BATTERY TRAY AND BATTERY CABLES and 1.18 BATTERY MAINTENANCE.
11. **Active exhaust:** Install active exhaust cable. See 7.31 ACTIVE EXHAUST: HDI.
12. **FLD models:** Install right side saddlebag. See 2.34 SADDLEBAGS: FLD.

⚠WARNING

After installing seat, pull upward on seat to be sure it is locked in position. While riding, a loose seat can shift causing loss of control, which could result in death or serious injury. (00070b)

13. Install seat.

⚠WARNING

After repairing the brake system, test brakes at low speed. If brakes are not operating properly, testing at high speeds can cause loss of control, which could result in death or serious injury. (00289a)

14. Test brakes.
    a. Apply brakes to check proper lamp operation.
    b. Test ride motorcycle. Repeat the bleeding procedure if brakes feel spongy.

ABS MODULE TO REAR BRAKE CALIPER

PART NUMBER	TOOL NAME
HD-48650	DIGITAL TECHNICIAN II
SNAP-ON BB200A	BASIC VACUUM BRAKE BLEEDER

FASTENER	TORQUE VALUE	
Banjo bolt to ABS module	14-18 ft-lbs	18.9-24.4 Nm
Banjo bolt to rear caliper	17-22 ft-lbs	23.0-29.8 Nm
Rear fork brake hose J-clip	40-60 **in-lbs**	4.5-6.8 Nm

Removal

1. Remove seat.
2. **FLD models:** Remove right side saddlebag. See 2.34 SADDLEBAGS: FLD.
3. Remove four cable straps securing rear WSS to rear brake line.
4. Remove rear brake line from clamp on inside of rear fork.
5. Remove battery. See 1.18 BATTERY MAINTENANCE.
6. Remove battery tray. See 7.10 BATTERY TRAY AND BATTERY CABLES.
7. **Active exhaust:** Remove active exhaust cable. See 7.31 ACTIVE EXHAUST: HDI.

NOTE

For best results, use the BASIC VACUUM BRAKE BLEEDER (Part No. Snap-on BB200A) or equivalent tool to drain the brake systems.

8. Drain rear brake fluid.
9. See Figure 2-75. Remove brake line clip.

NOTE

Wrap banjo fittings with pieces of lint-free shop towel to absorb any loss of brake fluid.

10. See Figure 2-72. Remove banjo bolt at module location (4) to release rear brake line from ABS module. Discard sealing washers.
11. Remove banjo bolt from rear brake caliper. Discard sealing washers.
12. Remove brake line.

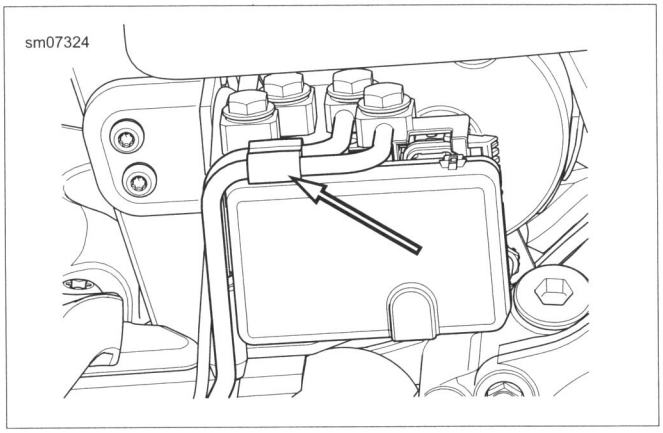

Figure 2-75. Brake Line Clip at ABS Module

Installation

1. Place rear brake line into approximate installed position.

NOTE

See Figure 2-75. Failure to install clip on rear brake lines at ABS module may result in the brake lines rubbing against the rear fork during vehicle operation.

2. See Figure 2-75. Install brake line clip at ABS module.
3. See Figure 2-72. Attach brake line to ABS module with banjo bolt and **new** sealing washers. Tighten to 14-18 ft-lbs (18.9-24.4 Nm).
4. Attach brake line to rear caliper with banjo bolt and **new** sealing washers. Tighten to 17-22 ft-lbs (23.0-29.8 Nm).
5. See Figure 2-76. If removed, align J-clip as shown and install screw. Tighten to 40-60 **in-lbs** (4.5-6.8 Nm). Do not allow clip to pass above top of rear fork.
6. Capture rear brake hose in J-clip mounted on rear fork.
7. Capture rear speed sensor cable along brake line using four cable straps. See 7.25 WHEEL SPEED SENSORS, Rear Wheel Speed Sensor (WSS).
8. Install battery tray and battery. See 7.10 BATTERY TRAY AND BATTERY CABLES and 1.18 BATTERY MAINTENANCE.
9. **Active exhaust:** Install active exhaust cable. See 7.31 ACTIVE EXHAUST: HDI.
10. Bleed brake system. See 2.16 BLEEDING BRAKES.

⚠WARNING

When any hydraulic brake component, line or connection is loosened or replaced on an ABS motorcycle, Digital Technician II must be used during the brake bleeding procedure to verify all air is removed from the system. Failure to properly bleed the brake system could adversely affect braking, which could result in death or serious injury. (00585c)

11. To confirm that brake system is properly connected and all air is purged, connect motorcycle to DIGITAL TECHNICIAN II (Part No. HD-48650) and perform "ABS Service" procedure.
12. **FLD models:** Install right side saddlebag. See 2.34 SADDLEBAGS: FLD.

⚠WARNING

After repairing the brake system, test brakes at low speed. If brakes are not operating properly, testing at high speeds can cause loss of control, which could result in death or serious injury. (00289a)

13. Test brakes.
    a. Turn ignition switch ON and verify operation of the brake lamp.
    b. Test ride motorcycle. Repeat the bleeding procedure if brakes feel spongy.

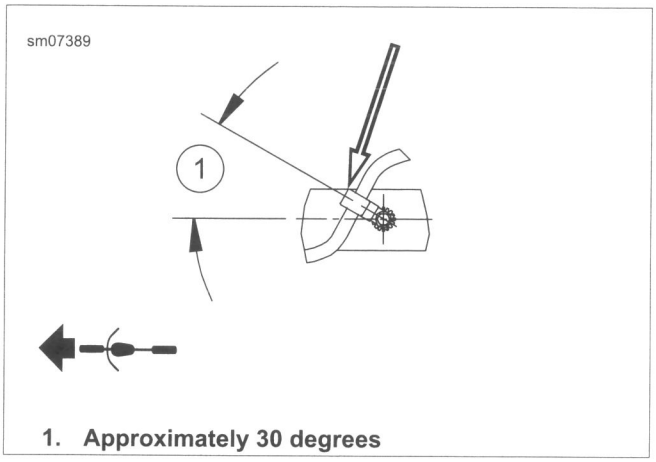

1. **Approximately 30 degrees**

Figure 2-76. Brake Line J-Clip at Rear Fork

GENERAL

FASTENER	TORQUE VALUE	
Brake line guard screw: FXDF	45-65 **in-lbs**	5.1-7.3 Nm

⚠WARNING

Do not use parts from single caliper repair kits (9/16 inch bore) on dual caliper models. Likewise, do not use parts from dual caliper repair kits (11/16 inch bore) on single caliper models. Using incorrect parts can cause brake failure, which could result in death or serious injury. (00278a)

⚠CAUTION

Direct contact of D.O.T. 4 brake fluid with eyes can cause irritation. Avoid eye contact. In case of eye contact flush with large amounts of water and get medical attention. Swallowing large amounts of D.O.T. 4 brake fluid can cause digestive discomfort. If swallowed, obtain medical attention. Use in well ventilated area. KEEP OUT OF REACH OF CHILDREN. (00240a)

NOTICE

D.O.T. 4 brake fluid will damage painted and body panel surfaces it comes in contact with. Always use caution and protect surfaces from spills whenever brake work is performed. Failure to comply can result in cosmetic damage. (00239b)

NOTICE

Do not allow dirt or debris to enter the master cylinder reservoir. Dirt or debris in the reservoir can cause improper operation and equipment damage. (00205c)

NOTES

- *See Figure 2-78. FXDF models equipped with ABS brakes have a brake line guard (8) on the right side upper fork clamp. When reinstalling or replacing guard, tighten screw (7) to 45-65* ***in-lbs*** *(5.1-7.3 Nm).*
- *All Dyna models equipped with ABS brakes (except FLD) use a remote brake fluid reservoir on the rear.*

ELECTRO HYDRAULIC CONTROL UNIT (EHCU)

PART NUMBER	TOOL NAME
HD-48650	DIGITAL TECHNICIAN II
SNAP-ON BB200A	BASIC VACUUM BRAKE BLEEDER

FASTENER	TORQUE VALUE	
ABS module to bracket fastener	50-70 **in-lbs**	5.6-7.9 Nm
ABS module to frame fastener	90-114 **in-lbs**	10.2-12.8 Nm
Banjo bolt to ABS module	14-18 ft-lbs	18.9-24.4 Nm

NOTE

The ABS module consists of the hydraulic control unit (HCU) and electrical control unit (ECU). The two are not serviced separately.

Removal

1. Remove seat.
2. **FLD models:** Remove right side saddlebag. See 2.34 SADDLEBAGS: FLD.
3. Remove battery and battery tray. See 7.10 BATTERY TRAY AND BATTERY CABLES.
4. **Active exhaust:** Remove active exhaust cable. See 7.31 ACTIVE EXHAUST: HDI.

NOTE

For best results, use the BASIC VACUUM BRAKE BLEEDER (Part No. Snap-on BB200A) or equivalent tool to drain the brake systems.

5. Drain brake systems.
6. See Figure 2-77. Disconnect ABS module electrical connector (5).

NOTE

Wrap banjo fittings with pieces of lint-free shop towel to absorb any loss of brake fluid.

7. Remove cable strap securing the rear WSS to the rear brake line.
8. See Figure 2-79. Remove brake line clip at ABS module.
9. See Figure 2-77. Remove four banjo bolts to release brake lines from ABS module. Discard sealing washers.

NOTICE

This device is sensitive to electrostatic discharge (ESD). To prevent damage to the device, always touch the motorcycle frame or a grounded surface before handling. (00588c)

10. See Figure 2-78. Remove two ABS module mounting screws (1) to release ABS module (2) bracket from frame.
11. Remove ABS module.

12. Remove two fasteners to release ABS module from mounting bracket.

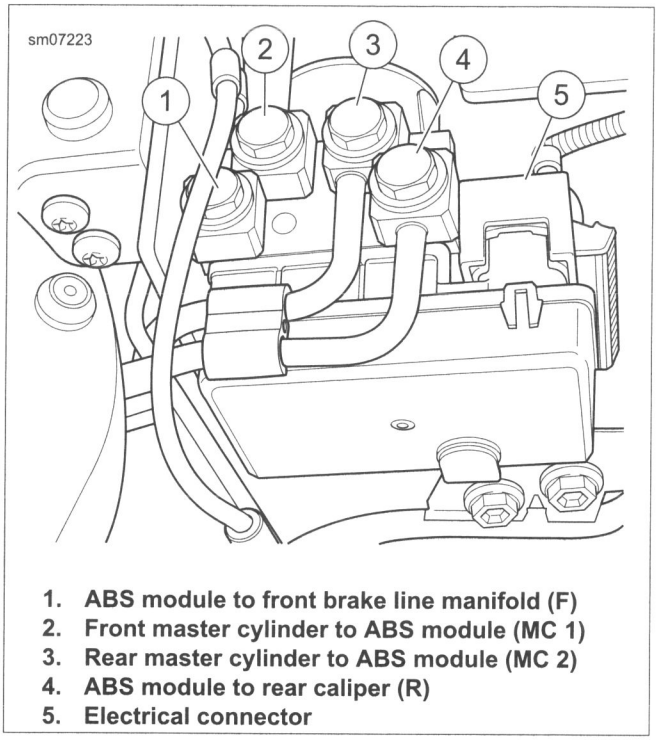

1. ABS module to front brake line manifold (F)
2. Front master cylinder to ABS module (MC 1)
3. Rear master cylinder to ABS module (MC 2)
4. ABS module to rear caliper (R)
5. Electrical connector

Figure 2-77. ABS Module Connections

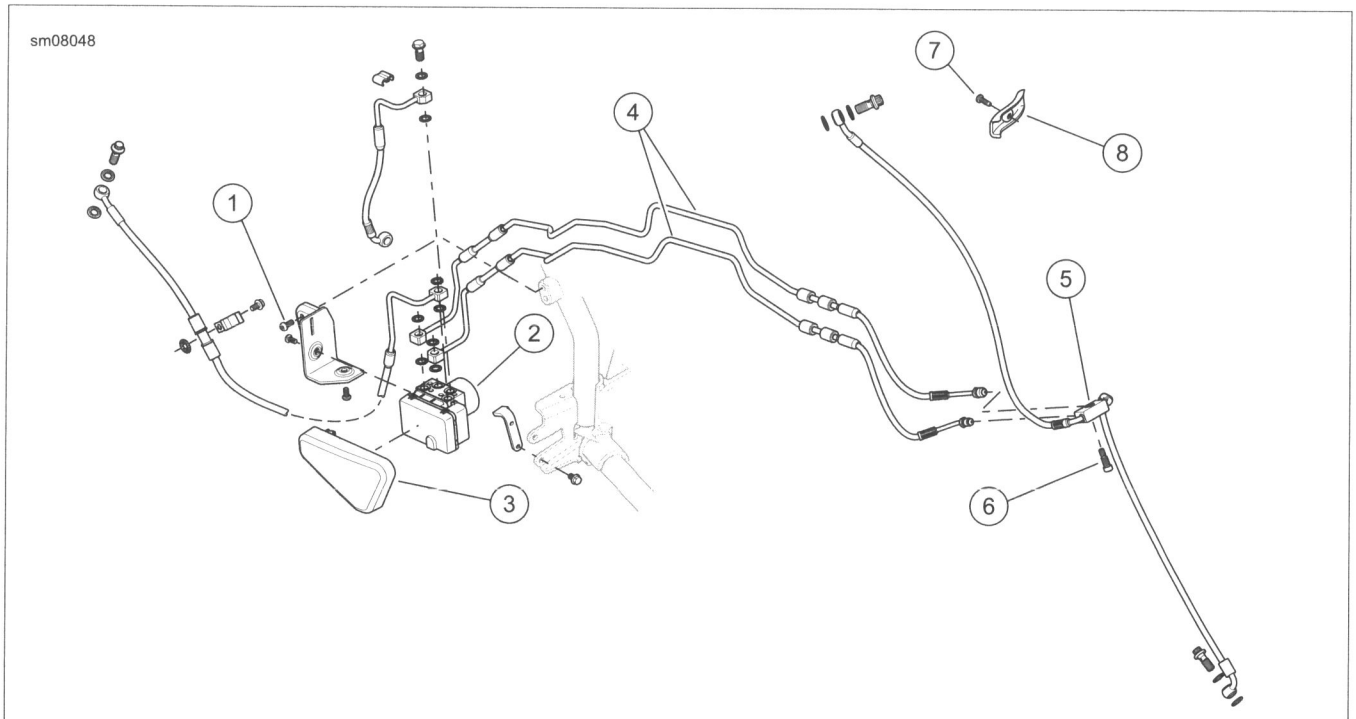

1. ABS module mounting screws (2)
2. ABS module
3. ABS module cover
4. ABS module to front manifold brake lines
5. Front brake line manifold
6. Front brake line manifold to lower fork bracket fastener
7. Screw
8. Brake line guard

Figure 2-78. ABS Brake System (typical)

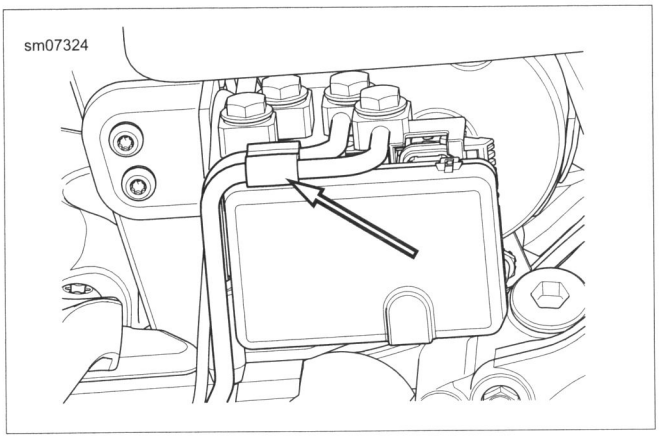

Figure 2-79. Brake Line Clip at ABS Module

Installation

1. Install two fasteners attaching ABS module to mounting bracket. Tighten to 50-70 **in-lbs** (5.6-7.9 Nm).
2. See Figure 2-78. Position ABS module (2) on frame.
3. Install two ABS module mounting screws (1) attaching bracket to frame. Tighten to 90-114 **in-lbs** (10.2-12.8 Nm).

NOTE

Markings on ABS module designate brake line connections.

4. See Figure 2-77. Loosely install banjo fittings to their respective ports on the ABS module using **new** sealing washers.

NOTE

See Figure 2-79. Failure to install clip on rear brake lines at ABS module may result in the brake lines rubbing against the rear fork during vehicle operation.

5. See Figure 2-79. Install brake line clip at ABS module.
6. Tighten banjo bolts to 14-18 ft-lbs (18.9-24.4 Nm).
7. Install cable strap securing the rear WSS to the rear brake line.
8. Connect ABS module electrical connector.
9. Install battery tray and battery. See 7.10 BATTERY TRAY AND BATTERY CABLES and 1.18 BATTERY MAINTENANCE.
10. **Active exhaust:** Install active exhaust cable. See 7.31 ACTIVE EXHAUST: HDI.
11. If a **new** ABS module assembly was installed, program the ABS module using DIGITAL TECHNICIAN II (Part No. HD-48650).
12. Bleed brake system. See 2.16 BLEEDING BRAKES.

⚠WARNING

When any hydraulic brake component, line or connection is loosened or replaced on an ABS motorcycle, Digital Technician II must be used during the brake bleeding procedure to verify all air is removed from the system. Failure to properly bleed the brake system could adversely affect braking, which could result in death or serious injury. (00585c)

13. To confirm that the brake systems are properly connected and air is completely purged, install master cylinder reservoir covers, connect motorcycle to DIGITAL TECHNICIAN II (Part No. HD-48650) and perform "ABS Service" procedure.
14. Install ABS module cover.
15. **FLD models:** Install right side saddlebag. See 2.34 SADDLEBAGS: FLD.

⚠WARNING

After installing seat, pull upward on seat to be sure it is locked in position. While riding, a loose seat can shift causing loss of control, which could result in death or serious injury. (00070b)

16. Install seat.

⚠WARNING

After repairing the brake system, test brakes at low speed. If brakes are not operating properly, testing at high speeds can cause loss of control, which could result in death or serious injury. (00289a)

17. Test brakes.
    a. Turn ignition switch ON and verify operation of the brake lamp.
    b. Test ride motorcycle. Repeat the bleeding procedure if brakes feel spongy.

GENERAL

⚠WARNING

When any hydraulic brake component, line or connection is loosened or replaced on an ABS motorcycle, Digital Technician II must be used during the brake bleeding procedure to verify all air is removed from the system. Failure to properly bleed the brake system could adversely affect braking, which could result in death or serious injury. (00585c)

⚠WARNING

Use denatured alcohol to clean brake system components. Do not use mineral-based solvents (such as gasoline or paint thinner), which will deteriorate rubber parts even after assembly. Deterioration of these components can cause brake failure, which could result in death or serious injury. (00291a)

⚠CAUTION

Direct contact of D.O.T. 4 brake fluid with eyes can cause irritation. Avoid eye contact. In case of eye contact flush with large amounts of water and get medical attention. Swallowing large amounts of D.O.T. 4 brake fluid can cause digestive discomfort. If swallowed, obtain medical attention. Use in well ventilated area. KEEP OUT OF REACH OF CHILDREN. (00240a)

NOTICE

D.O.T. 4 brake fluid will damage painted and body panel surfaces it comes in contact with. Always use caution and protect surfaces from spills whenever brake work is performed. Failure to comply can result in cosmetic damage. (00239b)

- **If DOT 4 brake fluid contacts painted surfaces, IMMEDIATELY flush area with clear water.**

NOTICE

Do not allow dirt or debris to enter the master cylinder reservoir. Dirt or debris in the reservoir can cause improper operation and equipment damage. (00205c)

Verify front brake hand lever and rear brake foot pedal have a firm feel when applied. If not, bleed system as described.

PROCEDURE

PART NUMBER	TOOL NAME
HD-48650	DIGITAL TECHNICIAN II
SNAP-ON BB200A	BASIC VACUUM BRAKE BLEEDER

FASTENER	TORQUE VALUE	
Brake caliper bleeder valve	80-100 **in-lbs**	9.0-11.3 Nm
Front master cylinder reservoir cover screws	6-8 **in-lbs**	0.7-0.9 Nm
Rear master cylinder reservoir cover screws, non-ABS models	6-8 **in-lbs**	0.7-0.9 Nm

NOTES

- *For best results, use of BASIC VACUUM BRAKE BLEEDER (Part No. Snap-on BB200A) or equivalent tool is recommended, particularly if the brake system was drained. If a vacuum brake bleeder is not available, use the following procedure.*
- ***ABS models:** To confirm that the brake systems are properly connected and air is completely purged, install master cylinder reservoir covers, connect motorcycle to DIGITAL TECHNICIAN II (Part No. HD-48650) and perform "ABS Service" procedure.*

1. Remove bleeder screw cap. Install end of clear plastic tubing over bleeder valve. Place free end in a suitable container.
2. Position vehicle or handlebar so master cylinder reservoir is level.

NOTES

- *Wrap a clean shop towel around the outside of the master cylinder reservoir to protect paint from brake fluid spills.*
- *Clean master cylinder reservoir cover before removal.*

3. Remove cover from master cylinder reservoir.

⚠WARNING

A plugged or covered relief port can cause brake drag or lock-up, which could lead to loss of control, resulting in death or serious injury. (00288a)

4. See Figure 2-80. Add brake fluid as necessary. Verify proper operation of the master cylinder relief port by actuating the brake pedal or lever. A slight spurt of fluid will break the fluid surface in the reservoir if internal components are working properly. Refer to Table 2-12.
5. Operate the brake lever or pedal to build hydraulic pressure.

NOTE

Pay careful attention to fluid level in the master cylinder reservoir. Add fluid before it empties to avoid drawing air into the brake lines.

6. While holding pressure with the brake lever or pedal:
   a. Open bleeder screw about 3/4 turn.
   b. Close bleeder valve as soon as the lever or pedal has moved full range of travel.
   c. Allow brake lever or pedal to return slowly to its released position.
7. Repeat steps until all air bubbles are purged and a solid column of fluid is observed in the bleeder tube.
8. Tighten bleeder screw to specification. Refer to Table 2-13. Install bleeder screw cap.

NOTE

Dual caliper brake system: *Bleed both calipers.*

9. Check and fill reservoir to specified level.
10. Verify that gasket and sealing surfaces are free of debris. Install master cylinder reservoir cover:
    a. **Front master cylinder reservoir:** Align the cover with the vent holes facing the rear. Install cover screws. Tighten to specification.
    b. **Rear master cylinder reservoir, all models without remote reservoir, non-ABS models.** Install cover screws.
    c. Tighten to specification. Refer to Table 2-13.
11. **ABS models:** Connect DIGITAL TECHNICIAN II (Part No. HD-48650) and perform "ABS Service" procedure.
12. Apply brakes to check proper lamp operation.

⚠WARNING

After repairing the brake system, test brakes at low speed. If brakes are not operating properly, testing at high speeds can cause loss of control, which could result in death or serious injury. (00289a)

13. Test ride motorcycle. Repeat the bleeding procedure if brakes feel spongy.

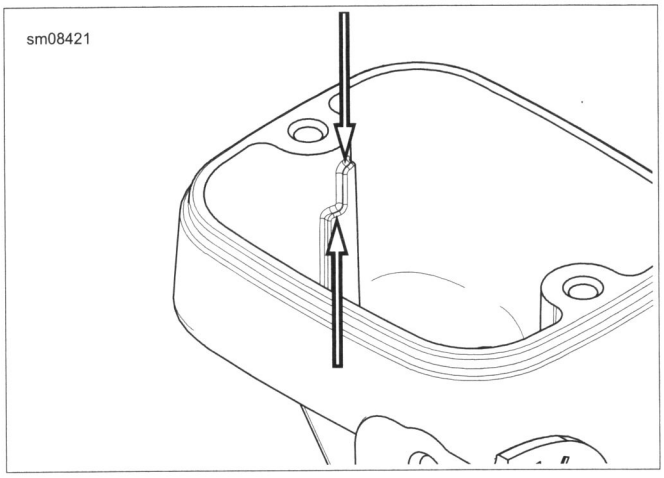

Figure 2-80. FILL Level Boss (front master cylinder)

Table 2-12. Fluid Level

ITEM	SPECIFICATION
Front reservoir	Between the fill level bosses
Rear reservoir: Models without remote reservoir	1/4-1/2 in (6.4-12.7 mm) below gasket surface
Rear reservoir: Models with remote reservoir	Between upper and lower level

Table 2-13. Torque Specifications

COMPONENT	TORQUE
Bleeder	80-100 **in-lbs** (9.0-11.3 Nm)
Front cover	6-8 **in-lbs** (0.7-0.9 Nm)
Rear cover, models without remote reservoir, non-ABS models	6-8 **in-lbs** (0.7-0.9 Nm)

GENERAL

⚠WARNING

Use only Harley-Davidson specified tires. See a Harley-Davidson dealer. Using non-specified tires can adversely affect stability, handling or braking, which could result in death or serious injury. (00024b)

⚠WARNING

Be sure tires are properly inflated, balanced, undamaged, and have adequate tread. Inspect your tires regularly and see a Harley-Davidson dealer for replacements. Riding with excessively worn, unbalanced, improperly inflated, overloaded or damaged tires can lead to tire failure and adversely affect stability and handling, which could result in death or serious injury. (00014b)

Always maintain proper tire pressure as specified in Table 2-7. Do not load tires beyond GAWR specified in Table 2-3. Under-inflated, over-inflated or overloaded tires can fail.

NOTES

- *Check runout on all wheels before installing a **new** tire. See 2.8 CHECKING AND TRUING WHEELS.*
- *Store **new** tires on a horizontal tire rack. Avoid stacking **new** tires in a vertical stack. The weight of the stack compresses the tires and closes down the beads.*
- *Inspect tires for punctures, cuts, breaks and wear at least weekly.*
- *See Figure 2-81. The tread wear indicator bars will appear on tire tread surfaces when 1/32 in (0.8 mm) or less of tread remains. Always remove tires from service before they reach the tread wear indicator bars.*

New tires are needed if any of the following conditions exist. See 1.7 TIRES AND WHEELS.

1. Tire wear indicator bars are visible on the tread surfaces.
2. Tire cords or fabric are visible through cracked sidewalls, snags or deep cuts.
3. A bump, bulge or split in the tire.
4. Puncture, cut or other damage to the tire that cannot be repaired.

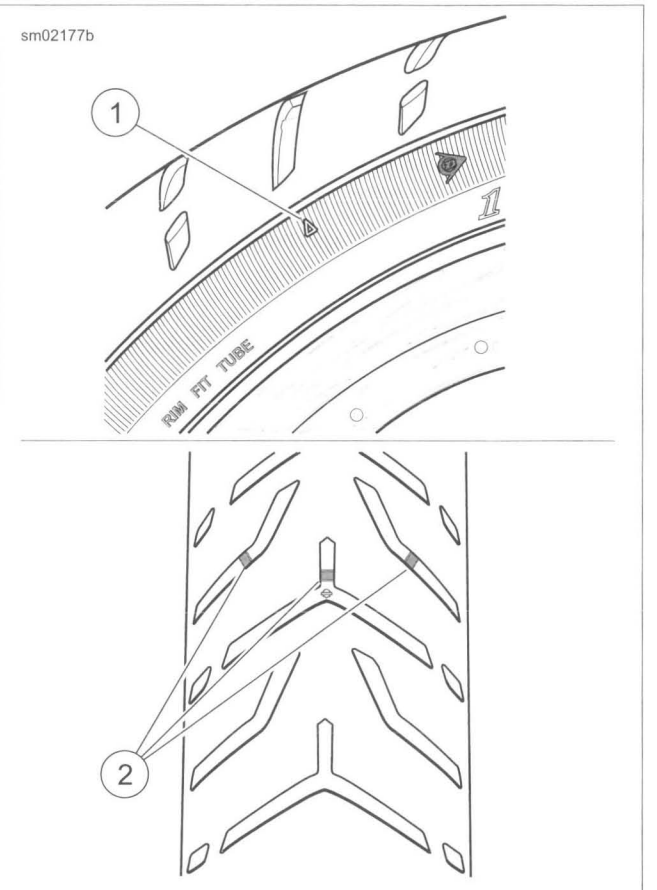

1. **Sidewall**
2. **Tread surface**

Figure 2-81. Tread Wear Indicators (Typical)

REMOVE

NOTE

Take care when replacing tire to prevent cosmetic damage to wheel.

1. Remove wheel. See 2.4 FRONT WHEEL, Removal or 2.5 REAR WHEEL, Removal.
2. Deflate tire.

NOTE

***Replace tube only:** Do not completely remove tire from rim to replace tube. Remove one side to access tube and inspect tire.*

3. Loosen both tire beads from rim flange.
4. Remove tire.

CLEAN, INSPECT AND REPAIR

1. Clean.
   a. Clean the inside of tire and outer surface of tube.
   b. Clean rim bead area with a stiff wire brush.

2. Inspect.
   a. Verify that wheel is true. See 2.8 CHECKING AND TRUING WHEELS.
   b. Check tire tread depth.
   c. Inspect tire for punctures or tears. Small punctures can be repaired.

⚠WARNING

Replace punctured or damaged tires. In some cases, small punctures in the tread area may be repaired from within the removed tire by a Harley-Davidson dealer. Speed should NOT exceed 50 mph (80 km/h) for the first 24 hours after repair, and the repaired tire should NEVER be used over 80 mph (130 km/h). Failure to follow this warning could lead to tire failure and result in death or serious injury. (00015b)

3. Repair.
   a. Patch inner tubes only as an emergency measure. Replace a damaged or patched tube as soon as possible.
   b. Repair tread on tubeless tires if puncture is 1/4 in (6.4 mm) or smaller.
   c. Make repairs from inside the tire.
   d. Always combine a patch and plug when repairing tire.

INSTALLATION

FASTENER	TORQUE VALUE	
Valve stem nut, tube type	3-7 **in-lbs**	0.3-0.8 Nm
Valve stem nut	12-15 **in-lbs**	1.4-1.7 Nm

⚠WARNING

Harley-Davidson front and rear tires are not the same. Interchanging front and rear tires can cause tire failure, which could result in death or serious injury. (00026a)

⚠WARNING

Do not exceed manufacturer's recommended pressure to seat beads. Exceeding recommended bead seat pressure can cause tire rim assembly to burst, which could result in death or serious injury. (00282a)

⚠WARNING

Be sure tires are properly inflated, balanced, undamaged, and have adequate tread. Inspect your tires regularly and see a Harley-Davidson dealer for replacements. Riding with excessively worn, unbalanced, improperly inflated, overloaded or damaged tires can lead to tire failure and adversely affect stability and handling, which could result in death or serious injury. (00014b)

For tire pressures, see 1.7 TIRES AND WHEELS, Tires.

Some tires have arrows molded into the tire sidewall. These tires should be mounted on the rim with the arrow pointing in the direction of forward rotation. The colored dot on the sidewall is a balance mark. Locate this dot next to the valve stem hole.

Tube Type Tires

⚠WARNING

Match tires, tubes, rim strips or seals, air valves and caps to the correct wheel. Contact a Harley-Davidson dealer. Mismatching can lead to tire damage, allow tire slippage on the wheel or cause tire failure, which could result in death or serious injury. (00023c)

NOTES

- *For correct tire and tube types, see 2.2 SPECIFICATIONS.*
- *Whenever a tube type tire is replaced, also replace the tube. Only patch inner tubes as an emergency measure. Replace a damaged or patched tube as soon as possible. Install **new** rim strips on all laced wheels.*

1. See Figure 2-82. On laced wheels, install a rim strip into the rim well. Make sure no spokes protrude through nipples, and be sure to align the valve stem hole in rim strip with valve stem hole in rim.
2. Install tube and tire.
3. Tighten the valve stem nut to 3-7 **in-lbs** (0.3-0.8 Nm).

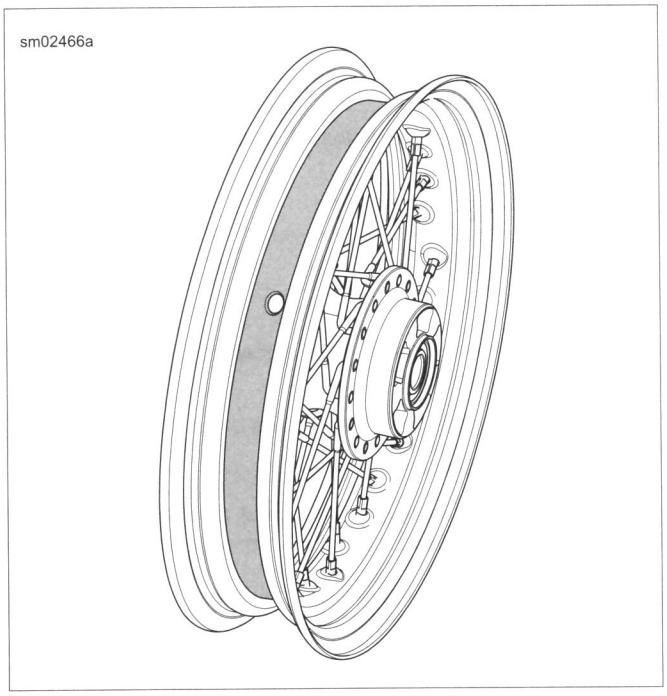

Figure 2-82. Installed Rim Strip

Tubeless Tires

⚠WARNING

Only install original equipment tire valves and valve caps. A valve, or valve and cap combination, that is too long or too heavy can strike adjacent components and damage the valve, causing rapid tire deflation. Rapid tire deflation can cause loss of vehicle control, which could result in death or serious injury. (00281a)

1. See Figure 2-83. Replace damaged or leaking valve stems.
2. Install rubber grommet (5) on valve stem before tightening nut (3).
3. Insert valve stem into rim hole.
4. Install metal washer (4).
5. Install nut and tighten to 12-15 **in-lbs** (1.4-1.7 Nm).
6. Install tire.

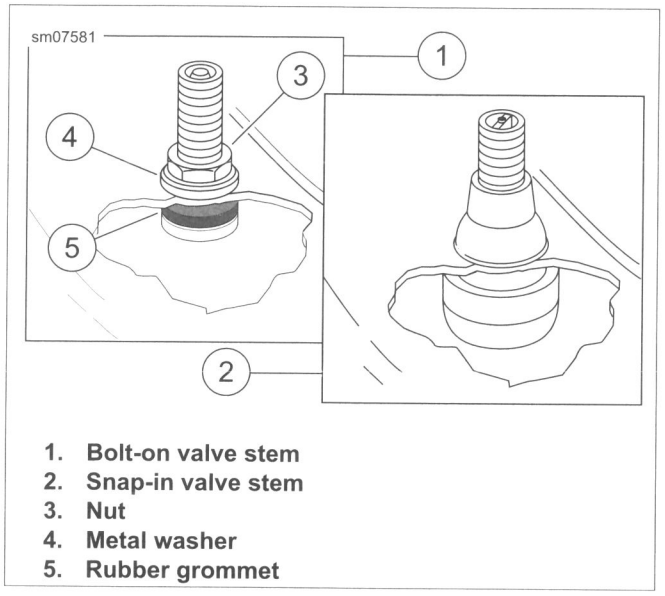

1. **Bolt-on valve stem**
2. **Snap-in valve stem**
3. **Nut**
4. **Metal washer**
5. **Rubber grommet**

Figure 2-83. Tubeless Tire Valve Stems

CHECK TIRE RUNOUT

Lateral Runout

NOTES

- *Measure runout with wheel installed on motorcycle or using a wheel stand.*
- *Avoid measuring on raised letters or vents.*

1. Check tire pressure.
2. See Figure 2-84. Spin the wheel and measure lateral runout from a fixed point to a smooth area on the tire sidewall.
3. If lateral runout exceeds 0.090 in (2.29 mm), remove tire from rim and check rim lateral runout. See 2.8 CHECKING AND TRUING WHEELS.
   a. If rim runout is within specification, replace faulty tire.
   b. If rim runout is not within specification, adjust spokes on laced wheel or replace cast wheel. See 2.8 CHECKING AND TRUING WHEELS.

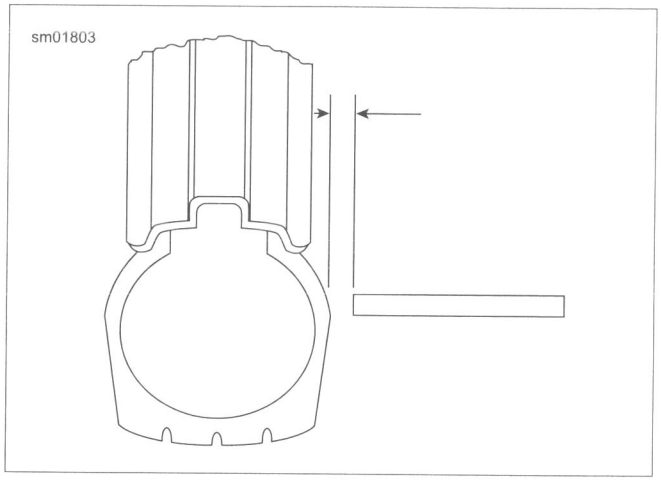

Figure 2-84. Checking Tire Lateral Runout

Radial Runout

1. Check tire pressure.
2. See Figure 2-85. Spin the wheel on the axle and measure radial runout at the tread centerline.
3. If tire runout exceeds 0.090 in (2.29 mm), remove tire from rim and check rim radial runout. See 2.8 CHECKING AND TRUING WHEELS.
   a. If rim runout is within specification, replace faulty tire.
   b. If rim runout is not within specification, adjust spokes on laced wheel or replace cast wheel. See 2.8 CHECKING AND TRUING WHEELS.

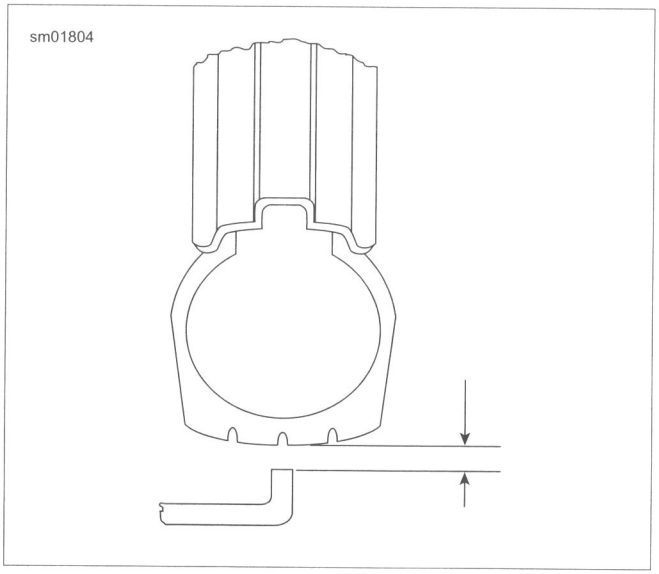

Figure 2-85. Checking Tire Radial Runout

BALANCE WHEEL

Static vs Dynamic

Wheel balancing is recommended to improve handling. Balanced wheels reduce vibration especially at high speeds.

Static balancing produces satisfactory results for normal highway speeds. Dynamic balancing can produce better results for deceleration.

Weights

NOTES

- *If more than 3.5 oz (99.2 g) of weight is required to balance wheel, rotate the tire 180 degrees on the rim and again balance the assembly. Balance wheels to within 0.5 oz (14 g).*
- *All wheel weights currently supplied by Harley-Davidson are made from zinc which is lighter than lead. The weight of each zinc segment is 0.18 oz (5 g) as compared to 0.25 oz (7 g) for lead. Weights are stamped for easy identification.*
- *If adding more than 1.5 oz (43 g) of weight at one location, divide the amount to apply half to each side of rim.*
- *On cast wheels without a flat area near the bead, place the weights cross-wise through the opening.*

1. See Figure 2-87. Place weights on a smooth surface of the wheel rim such that centrifugal force keeps them in place. Make sure that the area of application is clean, dry and free of oil and grease.

NOTE

See Figure 2-86. When installing wheel weights, consider cosmetics. Snaking (1) is not to exceed 0.040 in (1.02 mm) (2) of straight. The angle alignment of individual segments is not to exceed three degrees (3).

2. Remove paper backing from the weight. Press firmly in place and hold for ten seconds.

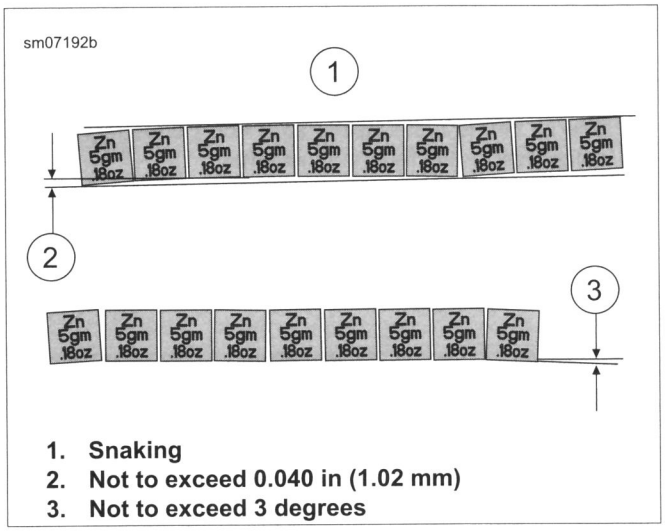

1. Snaking
2. Not to exceed 0.040 in (1.02 mm)
3. Not to exceed 3 degrees

Figure 2-86. Weight Segment Alignment

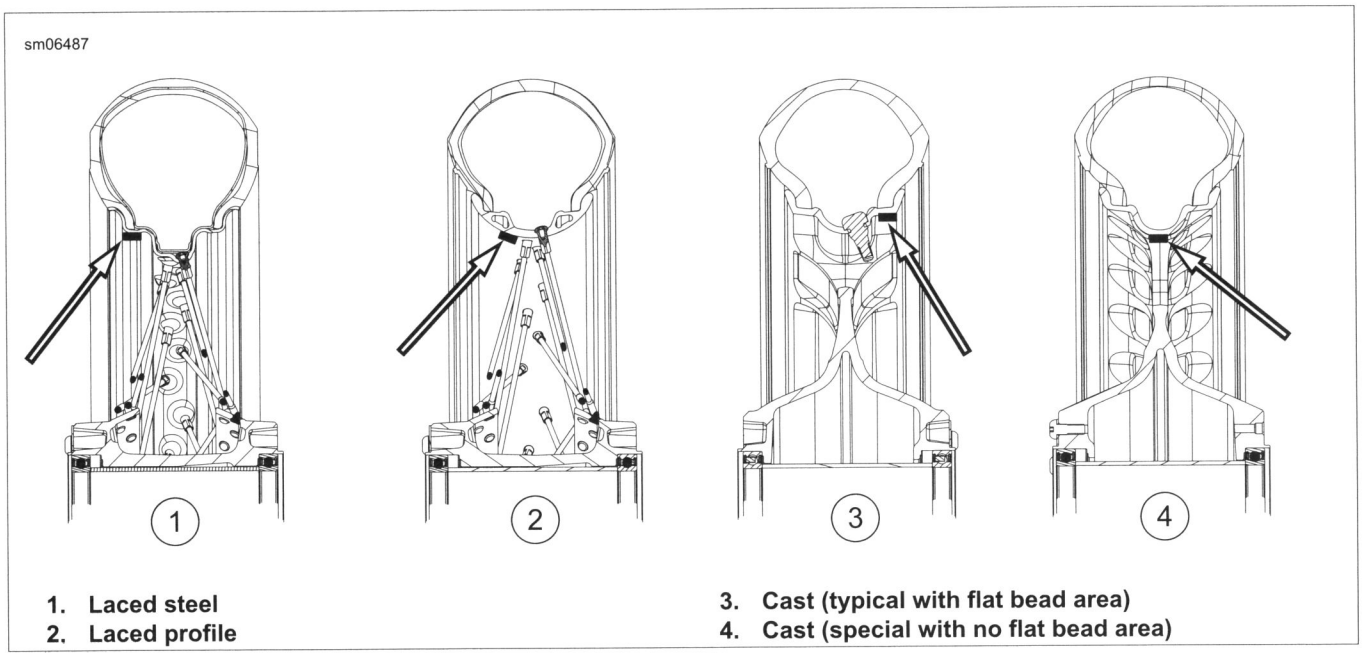

1. Laced steel
2. Laced profile
3. Cast (typical with flat bead area)
4. Cast (special with no flat bead area)

Figure 2-87. Wheel Weight Placement

CHECK FOR OIL LEAK

Fork Oil Seals

The fork oil seal allows a fine film of oil to lubricate the fork sliding surface.

- The oil film is more visible after continuous high-speed compression and rebound movement.
- Due to greater lubrication needs, larger forks have a greater amount of oil film than smaller forks.

Check Oil Leak

1. Observe oil ring.
2. Wipe fork clean.
3. Ride motorcycle over bumpy road or complete six braking events.
4. See Figure 2-88. Check fork slider tube for oil.
   a. If a normal oil/dust film (1, 2) is present, there is no leak.
   b. If an oil run or drip (3) is present, perform procedure two or three more times to confirm oil leak.

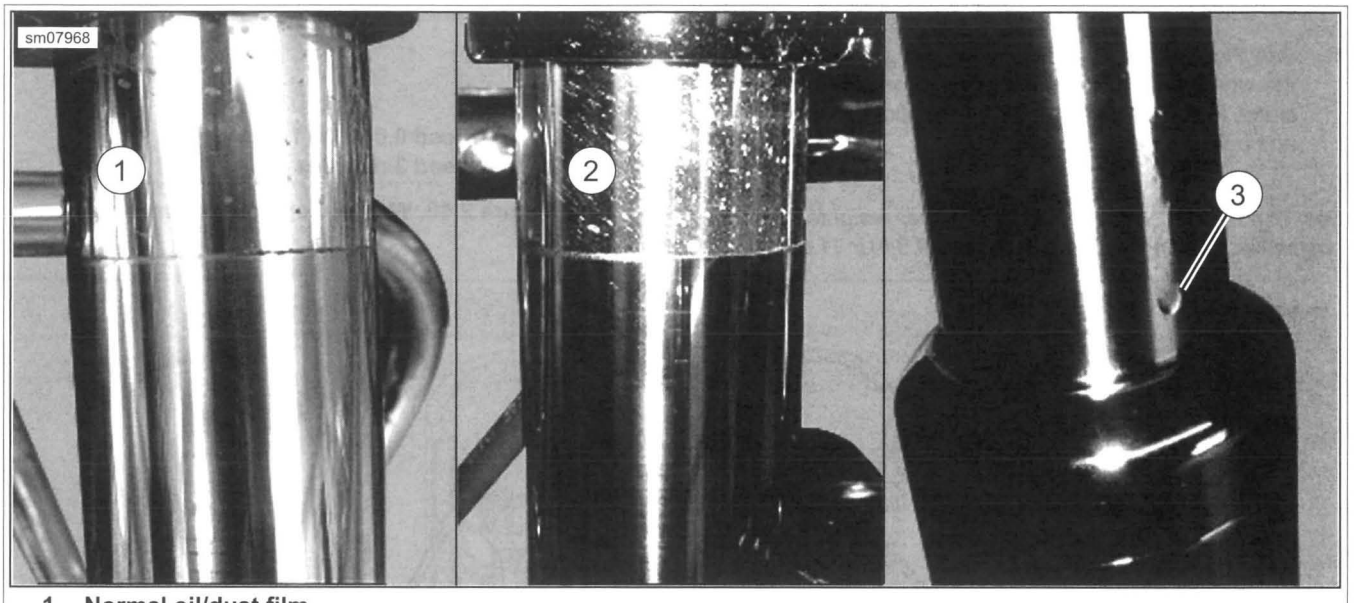

1. **Normal oil/dust film**
2. **Normal oil/dust film**
3. **Drip**

Figure 2-88. Front Forks

REMOVAL

1. Raise the front of the motorcycle.
2. Remove brake caliper and front wheel. See 2.4 FRONT WHEEL.
3. Remove front fender. See 2.28 FRONT FENDER.
4. See Figure 2-92. Loosen, but do not remove, fork tube caps (25).
5. Loosen fork bracket pinch bolts. Remove left and right fork assemblies from fork brackets.

DISASSEMBLY: ALL BUT FLD LEFT SIDE

PART NUMBER	TOOL NAME
HD-41177	FORK HOLDING TOOL

⚠WARNING

Wear safety glasses or goggles when servicing fork assembly. Do not remove slider tube caps without relieving spring preload or caps and springs can fly out, which could result in death or serious injury. (00297a)

NOTICE

Exercise caution to avoid scratching or nicking fork tube. Damaging tube can result in fork oil leaks after assembly. (00421b)

NOTE

This procedure applies to all conventional front fork assemblies. For left side FLD cartridge style front fork, see 2.18 FRONT FORK, Disassembly: Cartridge Fork (FLD, Left Side).

1. See Figure 2-89. Clamp fork tube and slider assembly in FORK HOLDING TOOL (Part No. HD-41177) and mount in vise.

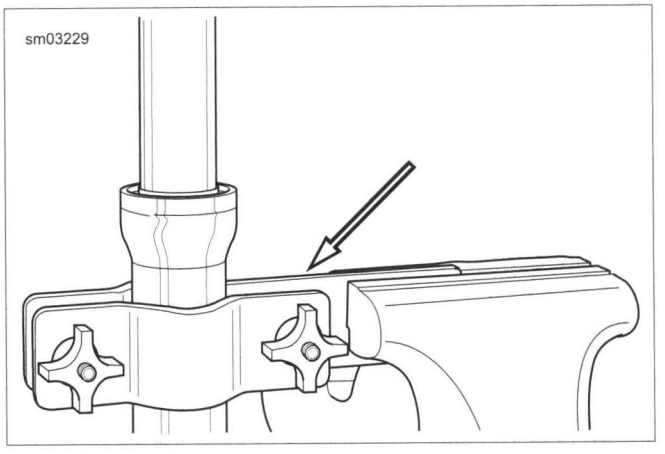

Figure 2-89. Fork Holding Tool (mounted vertically to slider)

NOTE

See Figure 2-92. On right fork tube and slider assembly, remove screws (18), lockwashers (17) and axle holder (16) to access seat pipe screw (15).

2. See Figure 2-90. While internal components are still under tension and less prone to rotate, break loose but do not completely remove seat pipe screw.
3. See Figure 2-92. Remove fork tube cap (25) and O-ring (24).
4. Remove spring collar (23), washer (22) and spring (21).
5. Remove fork assembly from fork holding tool and invert fork over a suitable container. Allow fork to drain. Extend and retract slider several times to push oil out of internal components.
6. Clamp fork tube in holder. Mount fork holding tool horizontally in vise.
7. See Figure 2-91. Remove cosmetic cover from fork slider by inserting brass drift into notch in fork slider and lightly tapping cover.
8. See Figure 2-92. Compress retaining ring (5). Remove retaining ring from groove in top of fork slider bore.
9. Remove seat pipe screw (15) and copper washer (14) from bottom of slider assembly (12, 13, FLD: 26). Discard seat pipe screw and copper washer.
10. Withdraw fork slider from fork tube (1) until guide bushing (8) contacts bushing (2) on fork tube. Guide bushing is a slight interference fit in fork slider.
11. Remove fork tube from fork slider. To overcome any resistance, use the fork tube as a slide hammer. Push fork tube into fork slider. Then pull outward with moderate force. Repeat until fork tube separates from fork slider.
12. Drain fork slider. Allow oil lock (9) to fall free.

NOTE

If replacing the fork slider only, further disassembly is not required. Proceed to fork assembly. See 2.18 FRONT FORK, Assembly: All But FLD Left Side.

13. If still attached to seat pipe (20), remove oil lock from lower end of seat pipe.
14. Remove seat pipe.
15. Remove rebound spring (19).
16. Remove oil seal (6), seal spacer (7), and guide bushing (8).
17. Repeat procedure for opposite side.

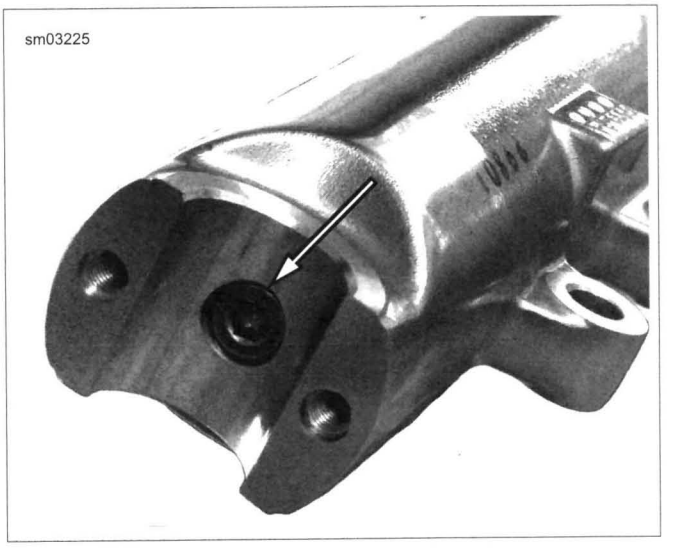

Figure 2-90. Seat Pipe Screw (right fork assembly)

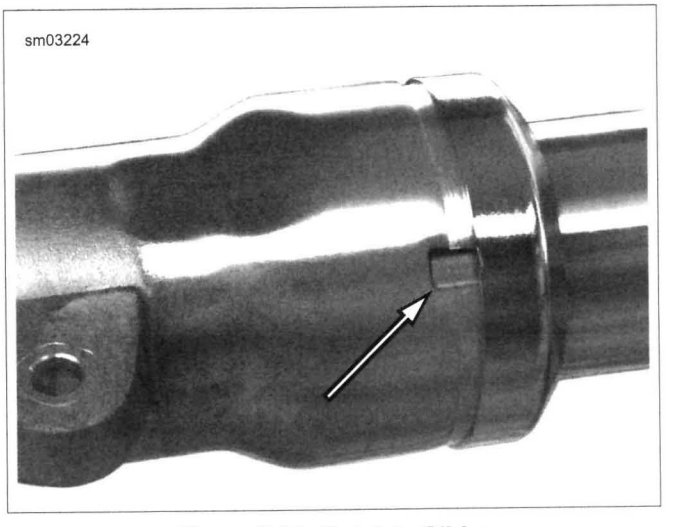

Figure 2-91. Notch in Slider

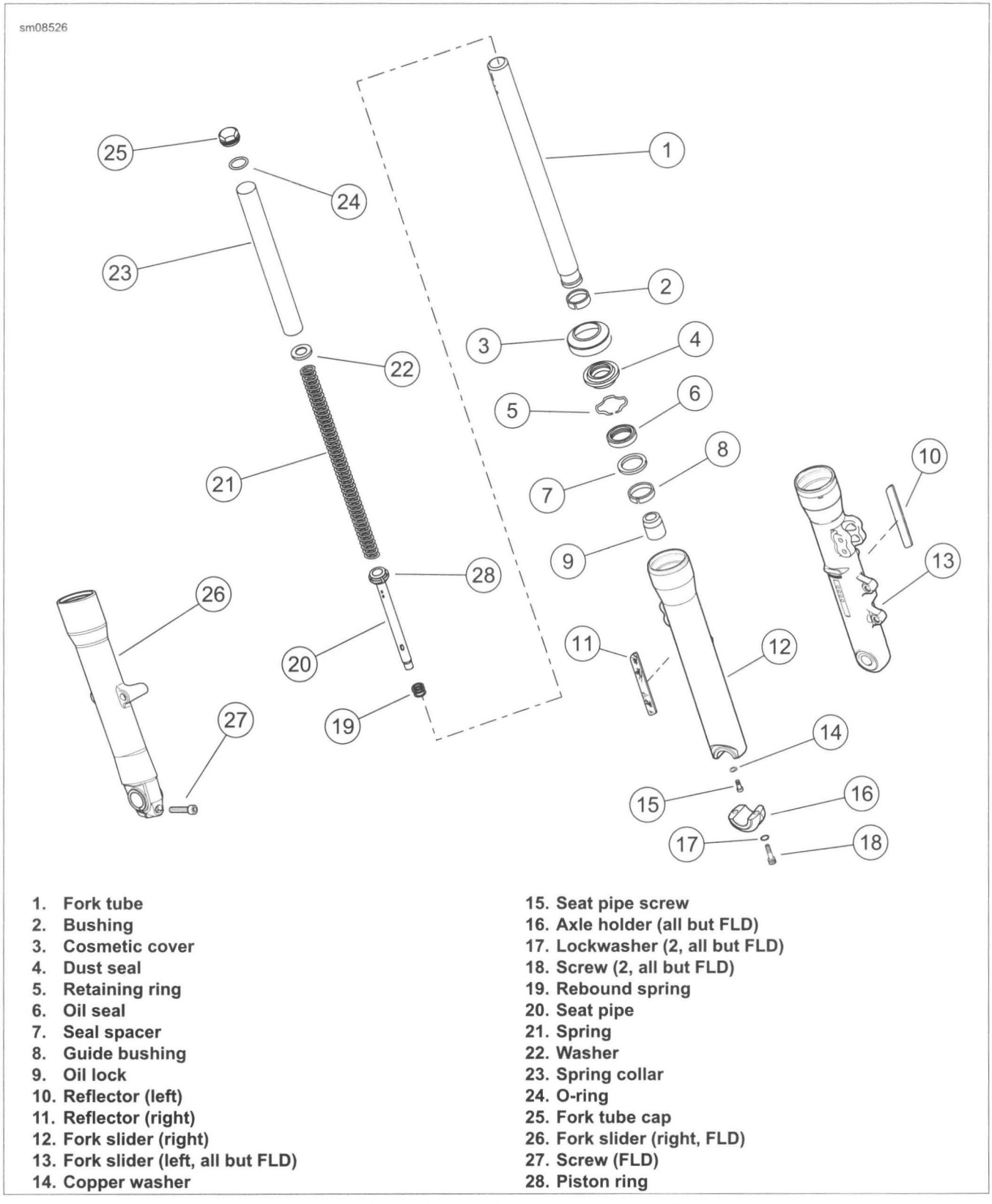

1. Fork tube
2. Bushing
3. Cosmetic cover
4. Dust seal
5. Retaining ring
6. Oil seal
7. Seal spacer
8. Guide bushing
9. Oil lock
10. Reflector (left)
11. Reflector (right)
12. Fork slider (right)
13. Fork slider (left, all but FLD)
14. Copper washer
15. Seat pipe screw
16. Axle holder (all but FLD)
17. Lockwasher (2, all but FLD)
18. Screw (2, all but FLD)
19. Rebound spring
20. Seat pipe
21. Spring
22. Washer
23. Spring collar
24. O-ring
25. Fork tube cap
26. Fork slider (right, FLD)
27. Screw (FLD)
28. Piston ring

Figure 2-92. Front Fork (all but FLD left side)

DISASSEMBLY: CARTRIDGE FORK (FLD, LEFT SIDE)

PART NUMBER	TOOL NAME
HD-41177	FORK HOLDING TOOL
HD-45966	FORK SPRING COMPRESSING TOOL
HD-45966-2	FORK SPRING COMPRESSING TOOL COLLAR

NOTICE

Exercise caution to avoid scratching or nicking fork tube. Damaging tube can result in fork oil leaks after assembly. (00421b)

1. See Figure 2-93. Clamp fork tube in FORK HOLDING TOOL (Part No. HD-41177) and mount in vise.

⚠WARNING

Wear safety glasses or goggles when servicing fork assembly. Do not remove slider tube caps without relieving spring preload or caps and springs can fly out, which could result in death or serious injury. (00297a)

2. Remove fork tube cap (1) from fork tube.

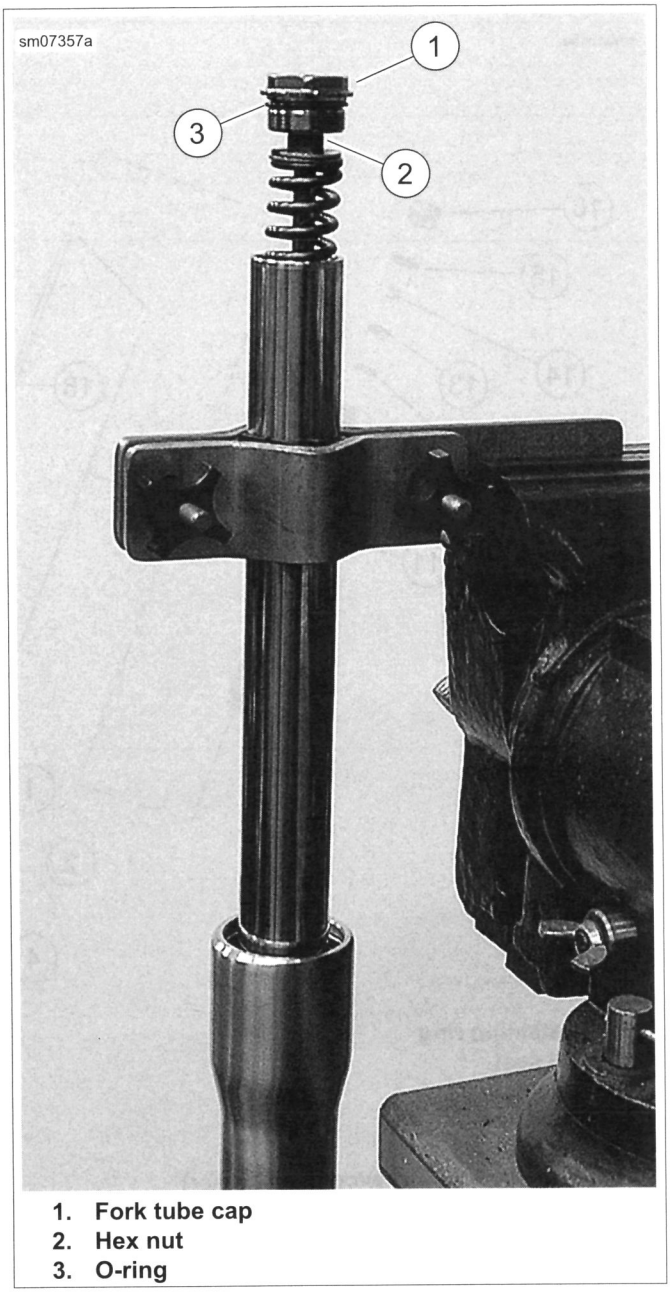

1. **Fork tube cap**
2. **Hex nut**
3. **O-ring**

Figure 2-93. Install Fork Tube Into Fork Holder

3. Pull up on fork slider to compress fork assembly. This method causes damper rod to protrude from top of fork tube.
4. Holding nut (2), remove fork tube cap from threaded end of damper rod. Remove O-ring (3) from fork tube cap. Discard O-ring.
5. Remove fork assembly from FORK HOLDING TOOL (Part No. HD-41177). Turning fork upside down, drain fork oil into a suitable container.

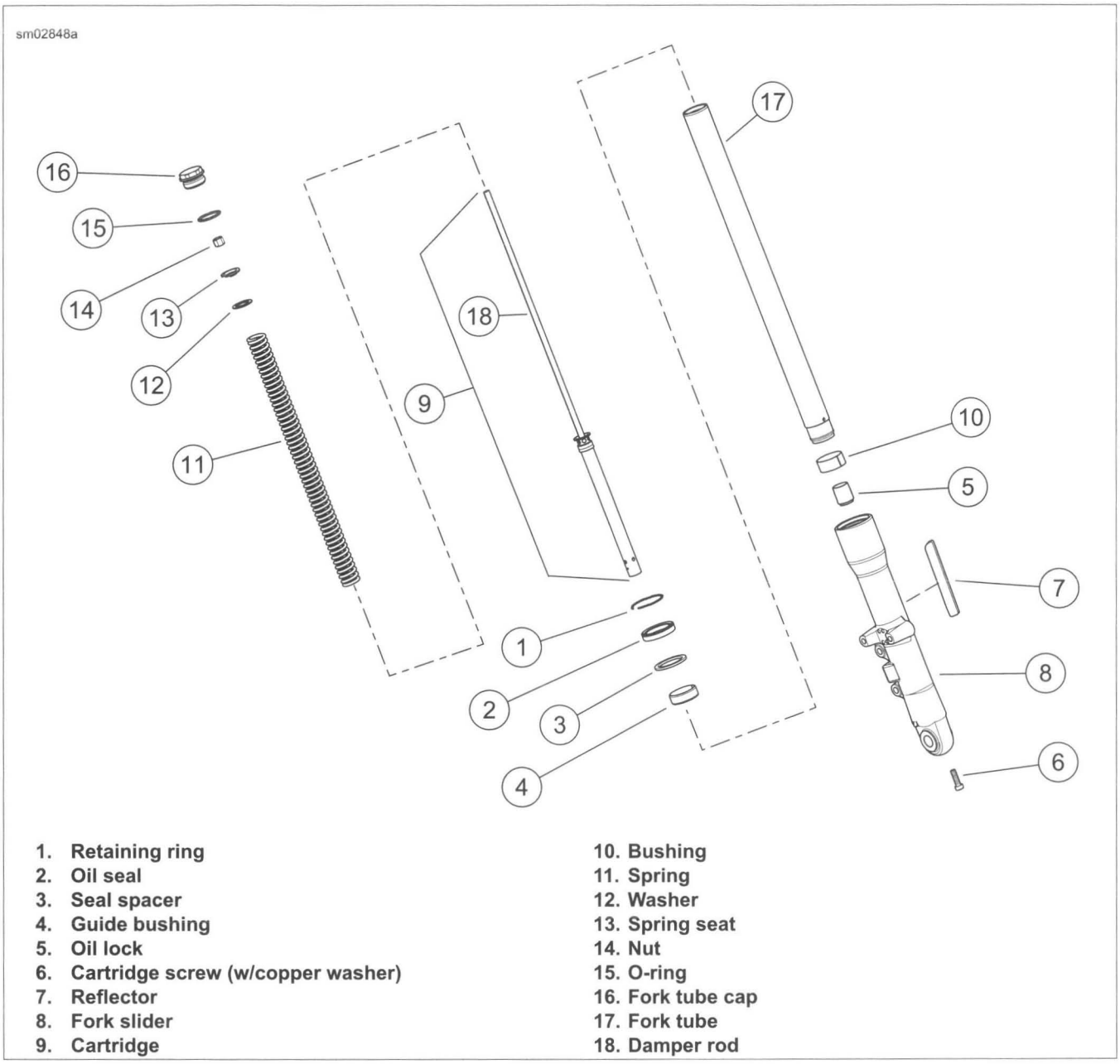

1. **Retaining ring**
2. **Oil seal**
3. **Seal spacer**
4. **Guide bushing**
5. **Oil lock**
6. **Cartridge screw (w/copper washer)**
7. **Reflector**
8. **Fork slider**
9. **Cartridge**
10. **Bushing**
11. **Spring**
12. **Washer**
13. **Spring seat**
14. **Nut**
15. **O-ring**
16. **Fork tube cap**
17. **Fork tube**
18. **Damper rod**

Figure 2-94. Front Fork: FLD Left Side (Cartridge Fork)

6. See Figure 2-95. Obtain FORK SPRING COMPRESSING TOOL (Part No. HD-45966). Install:
   a. Clamp tool (1) in vise in a vertical position with length adjuster screw (2) topside.
   b. Pull up on fork slider to compress fork assembly.
   c. Place hole at bottom of fork slider over post (5) at bottom end of tool.
   d. With the smaller OD topside, place FORK SPRING COMPRESSING TOOL COLLAR (Part No. HD-45966-2) (4) over nut, spring seat and flat washer of fork assembly.

NOTE

Use only hand tools to turn length adjuster screw on fork spring compressing tool. Do not use an air impact wrench.

   e. Adjust tool as necessary until three retaining pins engage blind holes in spring compressor. Turn length adjuster screw counterclockwise to lengthen, clockwise to shorten.
   f. Turn retaining pins as necessary to lock position of spring compressor collar.
   g. Tighten length adjuster screw to compress spring.
7. Using deep socket, remove nut from end of damper rod.

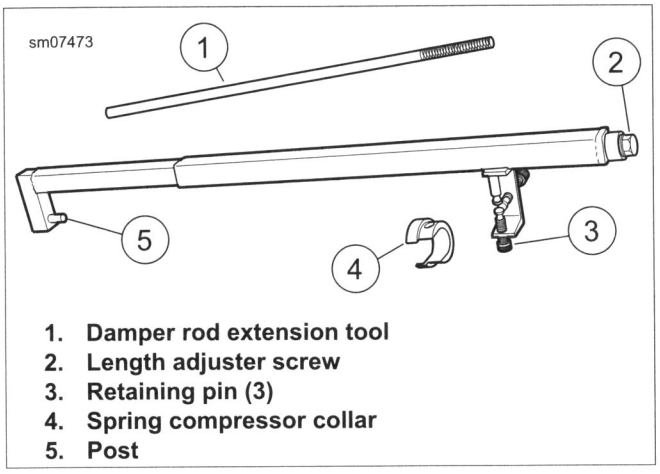

1. **Damper rod extension tool**
2. **Length adjuster screw**
3. **Retaining pin (3)**
4. **Spring compressor collar**
5. **Post**

Figure 2-95. Fork Spring Compressing Tool

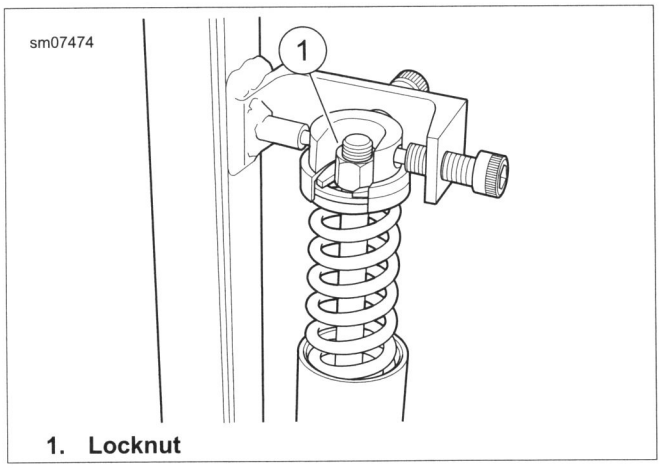

1. **Locknut**

Figure 2-96. Compress Fork Spring

8. Loosen length adjustment screw (2) to release tension on fork spring. Loosen retaining pins. Remove spring compressor collar (4). Remove spring seat and flat washer.
9. Remove fork assembly from tool. Remove fork spring from fork tube.
10. Obtain damper rod extension tool from FORK SPRING COMPRESSING TOOL (Part No. HD-45966) shown in Figure 2-97. Install extension tool onto end of damper rod.
11. See Figure 2-98. Turn fork assembly upside down over drain pan and slowly pump damper rod at least 20 times until rod moves freely.

NOTE

If only changing the fork oil, continue procedure at 2.18 FRONT FORK, Assembly: Cartridge Fork (FLD, Left Side). If overhauling the fork assembly, continue with procedure.

12. See Figure 2-97. Remove extension tool from damper rod. Install fork spring back into fork tube.
13. See Figure 2-94. Remove cartridge screw (6).
    a. Place a clean shop rag on the floor, and turning fork assembly upside down, press end of spring against rag.
    b. While compressing spring to prevent rotation of damper cartridge, remove cartridge screw from end of fork slider.
    c. Use an air impact wrench for best results. Discard cartridge screw with copper washer.
14. Remove spring and damper cartridge from fork tube.

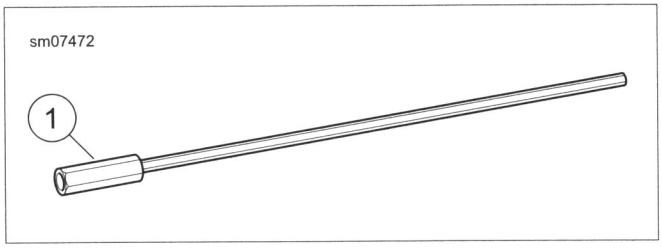

Figure 2-97. Damper Rod Extension Tool

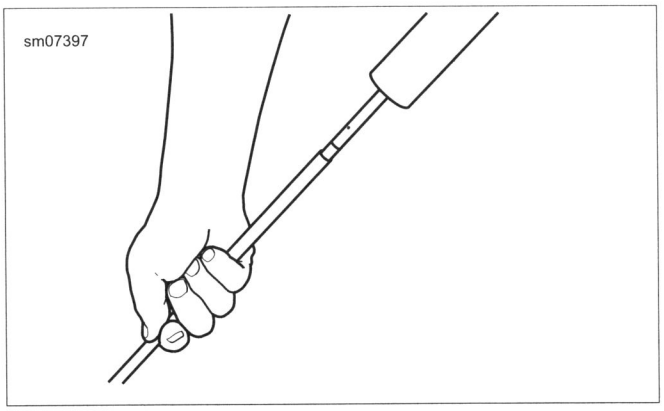

Figure 2-98. Pump Damper Rod Extension Tool

NOTE

See Figure 2-94. Do not expand or stretch retaining ring (1) to remove from fork tube (17) or ring can become bent or distorted.

15. See Figure 2-94. Using a pick tool, remove retaining ring (1) between fork slider (8) and fork tube (17).
16. Remove fork tube from fork slider. To overcome any resistance, use the fork tube as a slide hammer. Push fork tube into fork slider. Then pull outward with moderate force. Repeat until fork tube separates from fork slider.
17. Slide oil seal (2), seal spacer (3) and guide bushing (4) off end of fork tube. Discard oil seal.
18. Remove oil lock (5) from fork slider or end of cartridge (9) if still installed.

CLEANING AND INSPECTION

1. Clean all parts.
2. Inspect parts for wear or damage. Replace parts if necessary.
3. Replace retaining ring if bent or distorted.

4. Inspect OD of slider guide bushing and ID of fork tube bushing.
   a. If coating is worn through (metallic substrate showing), replace bushing.
   b. Inspect for distortion.
   c. If deep scratches or scoring are found, replace bushing. Also inspect mating components for similar wear. Replace or repair as necessary.
5. Check fork tube and slider for scoring, scratches and abnormal wear.
6. Inspect fork tube for nicks from stones and road debris, especially in area where seal contacts it. Replace if necessary.
7. See Figure 2-99. Check runout with a dial indicator.
   a. Set fork tube on V-blocks.
   b. Replace fork if runout exceeds 0.008 in (0.2 mm).

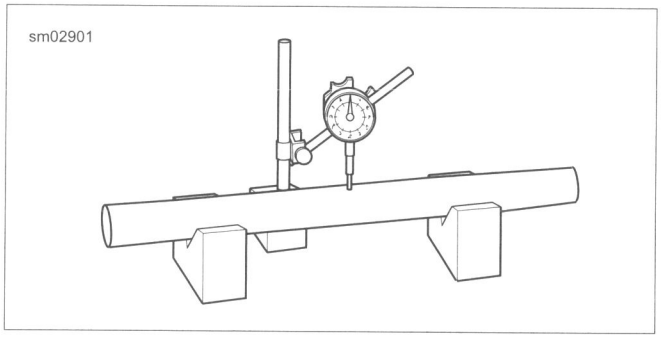

Figure 2-99. Measure Fork Tube Runout

ASSEMBLY: ALL BUT FLD LEFT SIDE

PART NUMBER	TOOL NAME
HD-41177	FORK HOLDING TOOL
HD-45305	FORK SEAL DRIVER
HD-59000A	PRO-LEVEL OIL GAUGE

FASTENER	TORQUE VALUE	
Front fork seat pipe screw	30-37 ft-lbs	40-50 Nm
Fork tube caps	22-59 ft-lbs	30-80 Nm

NOTE

This procedure applies to all conventional front fork assemblies. For left side FLD cartridge style front fork, see 2.18 FRONT FORK, Assembly: Cartridge Fork (FLD, Left Side).

1. See Figure 2-92. If bushing (2) was not removed, coat with TYPE "E" HYDRAULIC FORK OIL. If bushing was removed, install **new** bushing.
   a. Coat **new** bushing with TYPE "E" HYDRAULIC FORK OIL.
   b. Gently expand bushing at split line only enough to fit over end of fork tube (1).
   c. Slide bushing into groove in fork tube.
2. Insert seat pipe (20) with rebound spring (19) into fork tube (1).
3. Coat entire diameter of **new** oil seal (6) with Harley-Davidson SEAL GREASE.
4. Coat **new** guide bushing (8) with TYPE "E" HYDRAULIC FORK OIL. Slide guide bushing down to bushing (2) on fork tube. Follow with seal spacer (7), oil seal, retaining ring (5), dust seal (4) and cosmetic cover (3).
5. Install fork tube into FORK HOLDING TOOL (Part No. HD-41177) mounted horizontally in a vise.
6. Fit oil lock (9) onto seat pipe.
7. See Figure 2-100. Slide seat pipe back into fork tube until seat pipe is centered in tube.
8. See Figure 2-92. Gently install fork slider assembly (12, 13 or 26) onto fork tube and bushing.
9. Apply LOCTITE 565 THREAD SEALANT to **new** seat pipe screw (15). Insert seat pipe screw and copper washer (14) into seat pipe through bottom of fork slider assembly. Draw screw into seat pipe but do not tighten.
10. Verify action of fork by sliding fork slider up and down fork tube.
11. Assemble the FORK SEAL DRIVER (Part No. HD-45305) over fork tube in front of oil seal.

NOTE

Place the lettered side of the seal facing upward.

12. See Figure 2-101. Holding fork seal driver (4) together, tap oil seal (3), seal spacer (2) and guide bushing (1) into fork slider bore.
13. See Figure 2-92. Install retaining ring (5) into groove in top of oil seal.
14. Push dust seal (4) against oil seal and retaining ring.
15. Rotate cosmetic cover (3) to match any removal burrs to notch in fork slider. Snap cosmetic cover into place.
16. Move fork slider through its full range of travel several times to verify alignment.
17. Pull down on fork slider to apply downward force on rebound spring.
18. Tighten seat pipe screw to 30-37 ft-lbs (40-50 Nm).
19. Position fork tube vertically in fork holding tool. With fork slider compressed, fill the fork with TYPE "E" HYDRAULIC FORK OIL as referred to in Table 2-14.

Table 2-14. Fork Oil Volume

MODEL	OZ	CC	IN	MM
FXDB/C/P	28.6	845	3.74	95.0
FXDF	26.5	784	4.72	120.0
FXDWG	29.4	869	3.74	95.0
FXDL	26.4	780	4.65	118.0
FLD (left)	11.8	350	5.79	147.0
FLD (right)	14.1	417	5.08	129.0

20. Slowly pump fork slider 8-10 times to exhaust air from assembly. Fully compress fork slider to determine oil level.

NOTE

Measure fork oil level from top of fork tube with spacer and spring removed and fork fully compressed.

21. Using the PRO-LEVEL OIL GAUGE (Part No. HD-59000A), adjust the oil level to specification.
22. Pull out fork slider. Install spring (21) in fork tube with tightly wound end at bottom.
23. Install washer (22) and spring collar (23).

⚠WARNING

Wear safety glasses or goggles when servicing fork assembly. Do not remove slider tube caps without relieving spring preload or caps and springs can fly out, which could result in death or serious injury. (00297a)

24. Install fork tube cap (25) with **new** O-ring (24). Tighten to 22-59 ft-lbs (30-80 Nm).

NOTE

To prevent cross threading fork tube cap, use caution when threading in cap with the spring compressed.

25. Repeat procedure for opposite side.

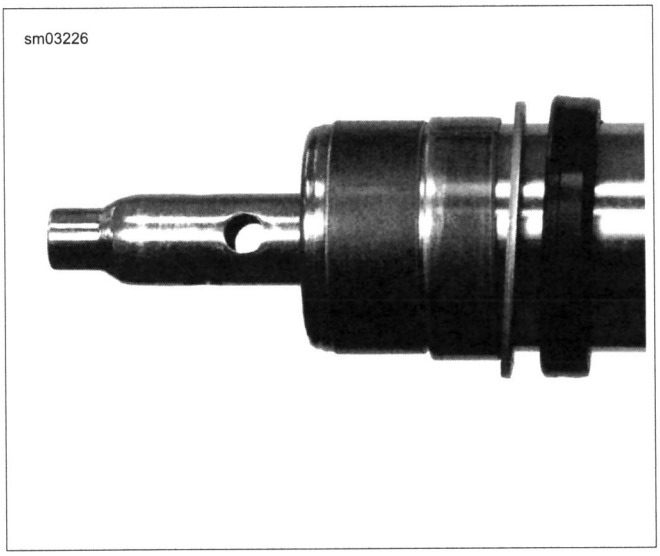

Figure 2-100. Seat Pipe Centered in Fork Tube

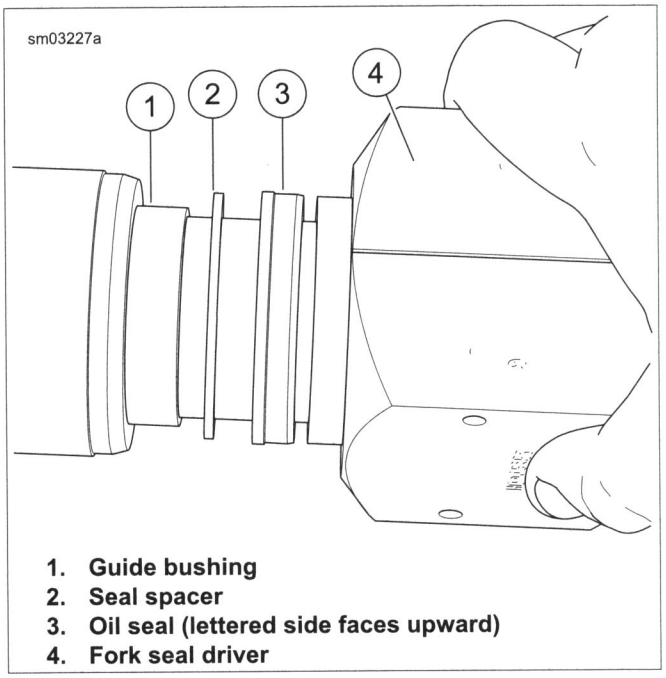

1. **Guide bushing**
2. **Seal spacer**
3. **Oil seal (lettered side faces upward)**
4. **Fork seal driver**

Figure 2-101. Assembled Fork Seal Driver

ASSEMBLY: CARTRIDGE FORK (FLD, LEFT SIDE)

PART NUMBER	TOOL NAME
HD-34634	FORK OIL SEAL INSTALLER
HD-41177	FORK HOLDING TOOL
HD-45966	FORK SPRING COMPRESSING TOOL
HD-59000B	FORK OIL LEVEL GAUGE

FASTENER	TORQUE VALUE	
Cartridge screw: FLD (left side)	10.8-18.0 ft-lbs	14.7-24.5 Nm
Nut, fork tube cap: FLD (left side)	13.0-16.6 ft-lbs	17.5-22.5 Nm
Fork tube cap: FLD (left side)	22-59 ft-lbs	30-80 Nm

NOTICE

Exercise caution to avoid scratching or nicking fork tube. Damaging tube can result in fork oil leaks after assembly. (00421b)

1. See Figure 2-94. If bushing (10) was not removed, coat with TYPE "E" HYDRAULIC FORK OIL. If bushing was removed, install **new** bushing.
   a. Coat **new** bushing with TYPE "E" HYDRAULIC FORK OIL.
   b. Gently expand bushing at split line only enough to fit over end of fork tube (17).
   c. Slide bushing into groove in fork tube.
2. Slide cartridge (9) into fork tube so that cartridge end drops through hole at bottom of fork tube.
3. Install oil lock (5) at end of cartridge.

4. Install fork tube into fork slider (8).
5. Apply LOCTITE 565 THREAD SEALANT to **new** cartridge screw with copper washer (6). Insert screw through hole at bottom of fork slider and start into end of cartridge or oil lock.
6. Coat **new** guide bushing (4) ID with TYPE "E" HYDRAULIC FORK OIL. Slide guide bushing down fork tube.
7. Slide seal spacer (3) down fork tube until it contacts guide bushing.
8. Slide FORK OIL SEAL INSTALLER (Part No. HD-34634) down fork tube. Using tool as a slide hammer, drive guide bushing into counterbore of fork slider. Remove tool.

NOTE

Place masking tape over edge of fork tube to avoid damaging lip of fork oil seal during installation.

9. Coat entire diameter of **new** oil seal (2) with Harley-Davidson SEAL GREASE.
10. Place the lettered side of the oil seal facing upward. Slide oil seal down fork tube until it contacts seal spacer.
11. Remove masking tape from edge of fork tube.

NOTICE

Exercise caution to avoid scratching or nicking fork tube. Damaging tube can result in fork oil leaks after assembly. (00421b)

12. Slide FORK OIL SEAL INSTALLER (Part No. HD-34634) down fork tube until it contacts oil seal.
13. See Figure 2-102. Using tool as a slide hammer, drive oil seal down fork tube until retaining ring groove is visible in fork slider ID. Remove tool.

NOTE

See Figure 2-94. Do not expand or stretch retaining ring (1) to install on fork tube or retaining ring can become bent or distorted.

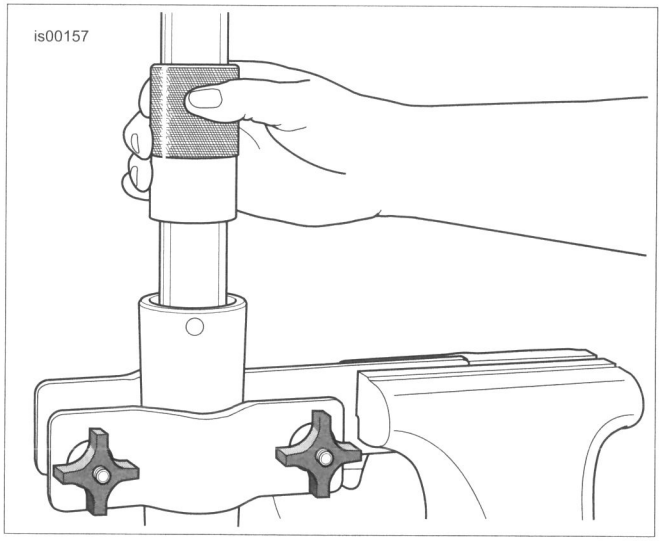

Figure 2-102. Install Fork Oil Seal

14. See Figure 2-94. Slide retaining ring (1) down fork tube until it contacts oil seal. Install retaining ring in fork slider groove.
15. Tighten cartridge screw to 10.8-18.0 ft-lbs (14.7-24.5 Nm).
16. Clamp fork slider upright in FORK HOLDING TOOL (Part No. HD-41177).
17. Fill fork tube:
    a. Install damper rod extension tool from FORK SPRING COMPRESSING TOOL (Part No. HD-45966)) onto end of damper rod (18).
    b. Pour 5 oz (147.0 ml) of TYPE "E" HYDRAULIC FORK OIL into fork tube.
    c. See Figure 2-103. Grasping extension tool, slowly pump damper rod until resistance is felt. then pump five more times.
    d. Place damper rod in fully bottomed position. Remove extension tool from end of damper rod.
    e. Pour an extra 6 oz (177.5 ml) of TYPE "E" HYDRAULIC FORK OIL into fork tube.
18. Adjust fork oil level to 5.8 in (147 mm) from top of fork tube with fork compressed:
    a. See Figure 2-104. Obtain FORK OIL LEVEL GAUGE (Part No. HD-59000B).
    b. Loosen thumbscrew on metal ring. Move ring up or down rod until bottom of ring is 5.8 in (147 mm) from end of rod. Tighten thumbscrew.
    c. Push plunger on cylinder in all of the way.
    d. See Figure 2-105. Insert rod into top of fork tube until metal ring rests flat on top of fork tube.
    e. Pull out plunger to evacuate excess fork oil from fork tube. Observe fork oil through transparent tube as it is drawn into cylinder. If no oil is drawn through transparent tube, add enough oil so tool usage sets fork oil level.
    f. Remove rod from fork tube. Push plunger into cylinder to eject excess fork oil into suitable container.
    g. If necessary, repeat fork oil evacuation procedure. Fork oil level is correct when no more fork oil is observed being drawn through transparent tube.

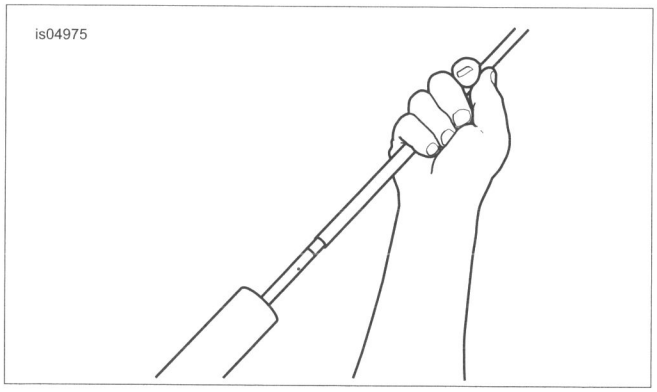

Figure 2-103. Pump Damper Rod Extension Tool

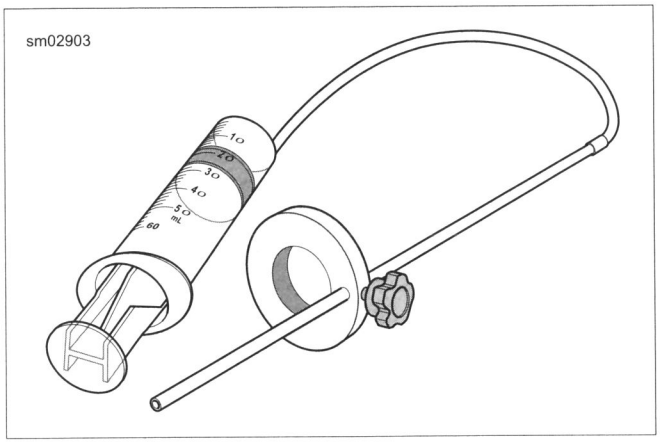

Figure 2-104. Fork Oil level Gauge

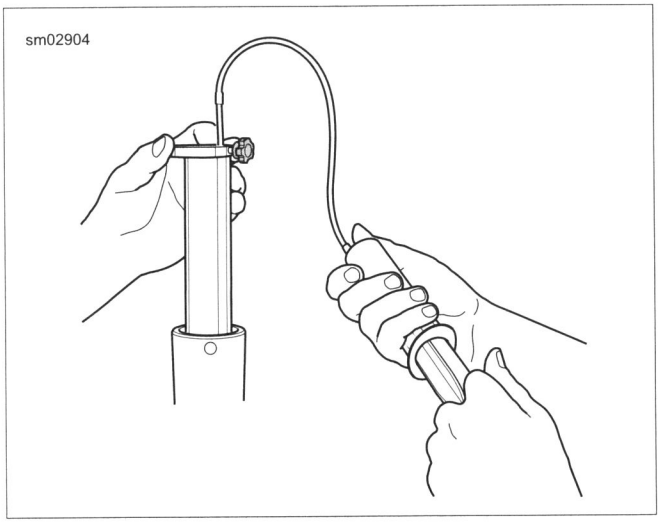

Figure 2-105. Remove Excess Fork Oil

⚠WARNING

Incorrect amount of fork oil can adversely affect handling and lead to loss of vehicle control, which could result in death or serious injury. (00298a)

19. See Figure 2-94. With tightly wound coils toward bottom, slide spring (11) into fork tube (17).
20. Pull up on fork slider to compress fork assembly. Compressing fork assembly causes damper rod and spring to protrude from top of fork tube.
21. Install damper rod extension tool onto end of damper rod.
22. Remove fork assembly from FORK HOLDING TOOL (Part No. HD-41177).

⚠WARNING

Wear safety glasses or goggles when servicing fork assembly. Do not remove slider tube caps without relieving spring preload or caps and springs can fly out, which could result in death or serious injury. (00297a)

23. See Figure 2-95. Clamp FORK SPRING COMPRESSING TOOL (Part No. HD-45966) in vise in a vertical position with length adjuster screw (2) topside.
24. Pull up on fork slider to compress fork assembly.
25. Place hole at bottom of fork slider over post (5) at bottom end of tool.
26. See Figure 2-94. Place washer (12) rounded side up over damper rod extension tool and on top of spring (11).
27. Place spring seat (13) concave side up on top of washer.
28. With smaller OD topside, place spring compressor over spring seat and washer.

NOTE

Use only hand tools to turn length adjuster screw on fork spring compressing tool. Do not use an air impact wrench or tool damage can occur.

29. Adjust tool as necessary until three retaining pins engage blind holes in spring compressor. Turn length adjuster screw counterclockwise to lengthen, clockwise to shorten.

⚠WARNING

Wear safety glasses or goggles when servicing fork assembly. Do not remove slider tube caps without relieving spring preload or caps and springs can fly out, which could result in death or serious injury. (00297a)

30. See Figure 2-96. Turn retaining pins as necessary to lock position of spring compressor.
31. Tighten length adjuster screw to compress spring.
32. After several turns, pull up on extension tool to raise damper rod. If threaded portion of rod cannot be pulled out of spring, compress spring further.
33. Repeat previous step until threaded portion of rod can be pulled out of spring. Remove extension tool. Do not let go of damper rod.
34. See Figure 2-94. Using a deep socket, thread nut (14) onto damper rod (18) until it contacts shoulder.
35. Loosen length adjuster screw to release tension on fork spring. Loosen retaining pins and remove spring compressor. Remove fork assembly from tool.
36. Clamp FORK HOLDING TOOL (Part No. HD-41177) in vise. Clamp fork tube into tool.
37. Install **new** O-ring (15) onto fork tube cap (16).
38. Thread fork tube cap onto threaded end of rod until it bottoms.
39. Now thread nut in until it contacts fork tube cap. Tighten to 13.0-16.6 ft-lbs (17.5-22.5 Nm).
40. Tighten fork tube cap to 22-59 ft-lbs (30-80 Nm).
41. Remove fork assembly from fork holding tool.

INSTALLATION

FASTENER	TORQUE VALUE	
Pinch bolts	30-35 ft-lbs	40.7-47.5 Nm

1. Slide left and right fork assemblies upward through lower and upper fork clamps.

2. See Figure 2-106. Make sure that top of fork tube cap extends above upper fork clamp according to specification listed in Table 2-15.

NOTES

- *Take measurement from midpoint of fork tube between top surface of fork clamp and top of fork cap.*
- ***FLD:** Fork protrusion can best be measured by placing a metal ruler flat on top of the fork tube cap. Then use a dial caliper to measure the protrusion from the top of the upper fork clamp to the top surface of the ruler. Subtract the thickness of the ruler to obtain the final measurement.*

Table 2-15. Fork Protrusion Specification

MODEL	SPECIFICATION
All but FLD	0.575-0.675 in (14.6-17.1 mm)
FLD	0.670-0.770 in (17.0-20.0 mm)

3. Tighten pinch bolts to 30-35 ft-lbs (40.7-47.5 Nm).
4. Install front fender. See 2.28 FRONT FENDER.
5. Install front brake caliper hydraulic lines. Install front brake calipers. See 2.11 FRONT BRAKE CALIPER.
6. Install front wheel. See 2.4 FRONT WHEEL.

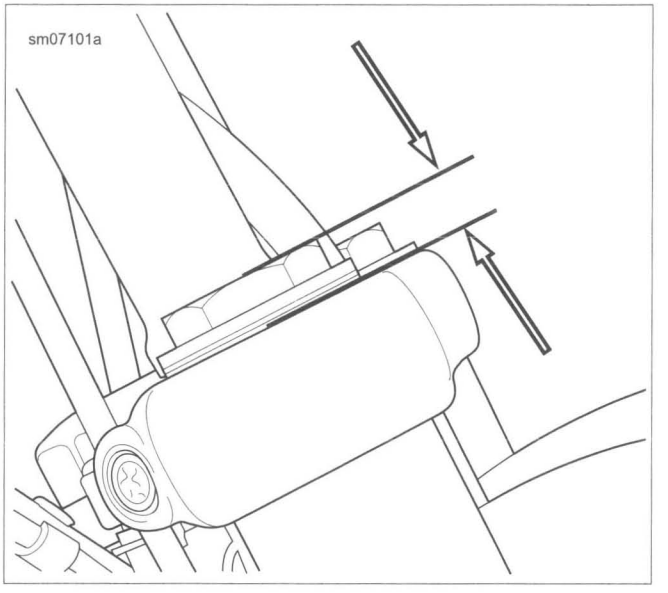

Figure 2-106. Fork Tube Protrusion

REMOVAL: ALL BUT FLD

1. Cover painted parts to protect finish.
2. Remove left and right fork assemblies from upper and lower fork bracket. See 2.18 FRONT FORK.
3. Remove the headlamp from lower fork bracket. See 7.12 HEADLAMP.
4. See Figure 2-107. Remove the fork stem cap (1).

NOTE

Do not pinch or kink control cables.

5. Remove the fork stem nut and the handlebar with upper bracket (4).
6. Remove the adjusting nut (5) and pull the fork stem and bracket (10, 11) out of the steering head.
7. Remove the upper dust shield (6) and bearing (7).
8. Slide fork stem and bracket from frame.

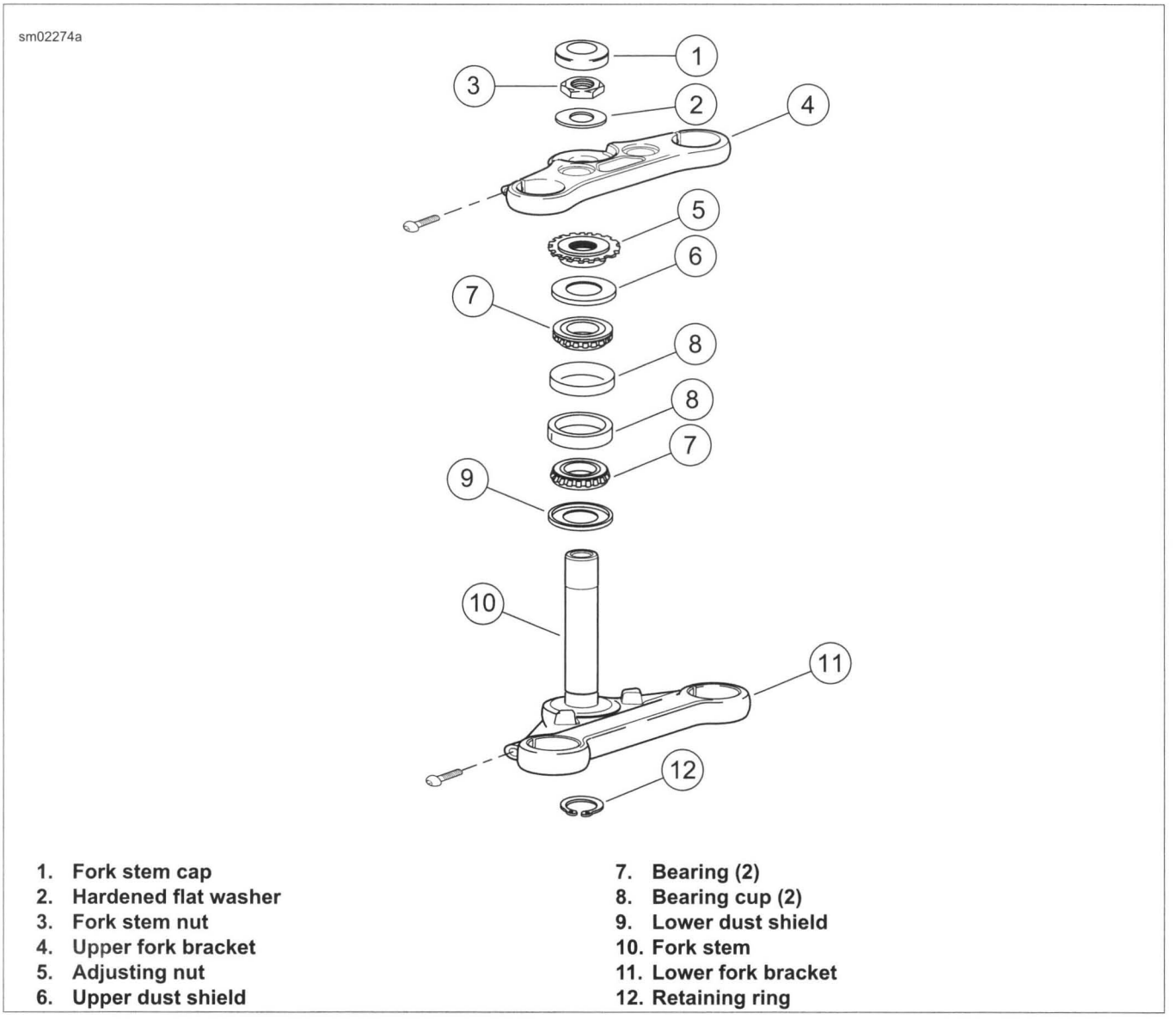

1. **Fork stem cap**
2. **Hardened flat washer**
3. **Fork stem nut**
4. **Upper fork bracket**
5. **Adjusting nut**
6. **Upper dust shield**
7. **Bearing (2)**
8. **Bearing cup (2)**
9. **Lower dust shield**
10. **Fork stem**
11. **Lower fork bracket**
12. **Retaining ring**

Figure 2-107. Steering Head

REMOVAL: FLD

1. Raise the front end of the motorcycle.
2. Remove brake caliper and front wheel. See 2.4 FRONT WHEEL.
3. Remove front fender. See 2.28 FRONT FENDER.
4. Remove headlight assembly. See 7.12 HEADLAMP.
5. Loosen handlebar riser bolts, but do not remove.
6. Loosen fork bracket pinch bolts. Do not remove tube caps. Slide left and right fork assemblies downward clear of fork brackets.
7. Remove fuel tank. See 4.4 FUEL TANK.
8. Remove wire harness shield and grommets from backbone of frame. See 7.32 MAIN WIRING HARNESS.

9. Disconnect handlebar control module connectors under fuel tank.
10. **ABS models:**
    a. Disconnect front wheel speed sensor connector
    b. Remove the brake line manifold from the lower fork bracket
11. Remove windshield assembly and docking hardware.

NOTES

- *Slider covers attach to the lower nacelle.*
- *Only remove slider covers from lower nacelle if replacing them.*

12. Remove lower nacelle along with slider covers.
13. Pull handlebar control module harnesses through upper fork clamp. Remove handlebar riser bolts from upper fork clamp.

NOTE

Always remove upper fork clamp first.

14. Remove upper nacelle and upper fork clamp.
15. Remove lower fork clamp.
16. Replace steering head bearings and cups as needed.

INSPECTION

1. Check upper and lower bearing cups in steering head. If they are pitted or grooved, replace the bearings and bearing cups in sets.

NOTICE

Replace both bearing assemblies even if one assembly appears to be good. Mismatched bearings can lead to excessive wear and premature replacement. (00532c)

2. Replace bearings that do not turn freely.

DISASSEMBLY

PART NUMBER	TOOL NAME
HD-33416	UNIVERSAL DRIVER
HD-39301-A	STEERING HEAD BEARING RACE REMOVER

Steering Head Bearing Race Removal

1. See Figure 2-108. With the tapered side down, seat the two-piece STEERING HEAD BEARING RACE REMOVER (Part No. HD-39301-A) (1) on the upper bearing race leaving a gap in the middle.
2. Install the collet (2) on the UNIVERSAL DRIVER (Part No. HD-33416).
3. Insert the driver (3) at the bottom of the steering head tube. While holding the remover tool on the race, center the collet (2) in the gap. Tap the driver to remove the upper race.
4. Reverse the tool and repeat the procedure to remove the lower bearing race.

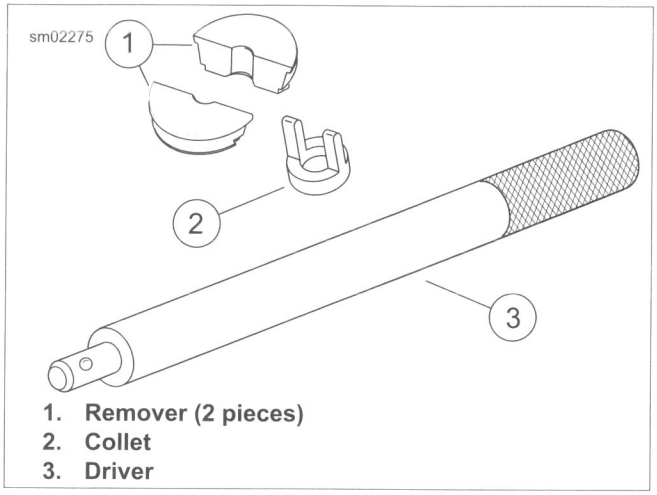

1. **Remover (2 pieces)**
2. **Collet**
3. **Driver**

Figure 2-108. Race Remover Tools

NOTE

If bearing cups are removed, they must be replaced. The lower bearing cone is not pressed on fork stem. Bearing cone can be slipped off fork stem along with lower dust shield.

ASSEMBLY

PART NUMBER	TOOL NAME
HD-39302	STEERING HEAD BEARING RACE INSTALLER

1. Pack the **new** bearings with SPECIAL PURPOSE GREASE.

NOTE

Press only on inner bearing race or damage to bearing will occur.

2. See Figure 2-107. Install the lower dust shield (9) and **new** bearing (7) on the fork stem (10).

⚠WARNING

Properly seat bearing cups in steering head bore. Improper seating can loosen fork stem bearings adversely affecting stability and handling, which could result in death or serious injury. (00302a)

3. Lubricate the races with engine oil. Install the **new** races using STEERING HEAD BEARING RACE INSTALLER (Part No. HD-39302).

INSTALLATION: ALL BUT FLD

⚠WARNING

Properly adjust fork stem bearings. Improper adjustments can adversely affect stability and handling, which could result in death or serious injury. (00301c)

1. See Figure 2-107. Insert the stem and bracket assembly into the frame steering head and install the bearing (7) and upper dust shield (6).
2. Secure with the adjusting nut (5) and tighten until there is no noticeable shake or free play between bearings and races. Fork stem must turn freely from side to side.

NOTE

The washer under the fork stem nut is a special hardened material. Never replace this washer with a common flat washer. Doing so may allow the fork stem nut torque to loosen resulting in loss of steering control.

3. Install upper fork bracket (4) and hardened flat washer (2).
4. Install stem nut and hand tighten.
5. Install the headlamp assembly. See 7.12 HEADLAMP.
6. Install fork sides. See 2.18 FRONT FORK.
7. Adjust steering head bearings for proper fall-away. See 1.17 STEERING HEAD BEARINGS.

NOTE

After tightening the fork stem nut, verify that the fall-away is correct.

8. Align headlamp. See 1.20 HEADLAMP ALIGNMENT.

INSTALLATION: FLD

PART NUMBER	TOOL NAME
HD-50651	FORK STEM NUT SOCKET

FASTENER	TORQUE VALUE	
Lower nacelle fasteners: FLD	84-120 **in-lbs**	9.5-13.5 Nm
Upper and lower pinch bolts: FLD	30-35 ft-lbs	40.7-47.5 Nm
Handlebar riser bolts: FLD	30-40 ft-lbs	40.7-54.2 Nm
Headlight to nacelle: FLD	7-10 **in-lbs**	0.8-1.1 Nm
Upper nacelle fasteners: FLD	84-120 **in-lbs**	9.5-13.5 Nm
Windshield docking hardware: FLD	84-120 **in-lbs**	9.5-13.5 Nm
Brake manifold to lower fork: FLD	36-48 **in-lbs**	4.0-5.4 Nm
Fork stem nut: FLD	70-80 ft-lbs	94.9-108.4 Nm

1. Install lower fork clamp.

NOTE

The washer under the fork stem nut is a special hardened material. Never replace this washer with a common flat washer. Doing so may allow the fork stem nut to loosen.

2. Install upper fork clamp.

NOTE

Always install the lower nacelle cover and cover assemblies before installing fork sides into brackets.

3. Install lower nacelle along with cover assemblies. Tighten two lower fasteners to 84-120 **in-lbs** (9.5-13.5 Nm).
4. Slide left and right fork assemblies upward and into upper and lower fork brackets.
5. See Figure 2-109. Make sure that the top of fork slider cap extends 0.670-0.770 in (17.0-20.0 mm) above upper fork clamp.
6. Install upper and lower pinch bolts. Tighten to 30-35 ft-lbs (40.7-47.5 Nm).
7. Install upper nacelle with two fasteners in rear of nacelle, but do not tighten.
8. Install handlebar riser bolts through upper fork clamp and upper nacelle. Pull handlebar control module harnesses down through upper fork clamp and upper nacelle.
9. Tighten handlebar riser bolts to 30-40 ft-lbs (40.7-54.2 Nm).
10. Install headlight assembly. Tighten to 7-10 **in-lbs** (0.8-1.1 Nm).
11. Tighten upper nacelle fasteners to 84-120 **in-lbs** (9.5-13.5 Nm).
12. Install docking hardware and windshield assembly. Tighten to 84-120 **in-lbs** (9.5-13.5 Nm).
13. **ABS models:** Install the brake line manifold to the lower fork bracket and lower nacelle. Tighten to 36-48 **in-lbs** (4.0-5.4 Nm).

NOTE

***ABS models:** See 2.15 ABS MODULE (EHCU).*

14. Connect handlebar control modules.
15. **ABS models:** Connect front WSS connector.
16. Install harness shield and grommets into backbone of frame. See 7.32 MAIN WIRING HARNESS.
17. Install fuel tank. See 4.4 FUEL TANK.
18. Install front fender. See 2.28 FRONT FENDER.
19. Install front wheel and caliper. See 2.4 FRONT WHEEL.
20. Adjust steering head. See 1.17 STEERING HEAD BEARINGS.
21. If proper fall-away has been achieved, then use FORK STEM NUT SOCKET (Part No. HD-50651) to tighten fork stem nut. Tighten to 70-80 ft-lbs (94.9-108.4 Nm).

NOTE

After tightening the fork stem nut and before installing the fork stem cap, verify that the fall-away is correct.

22. Install the fork stem cap.
23. Align headlamp. See 1.20 HEADLAMP ALIGNMENT.

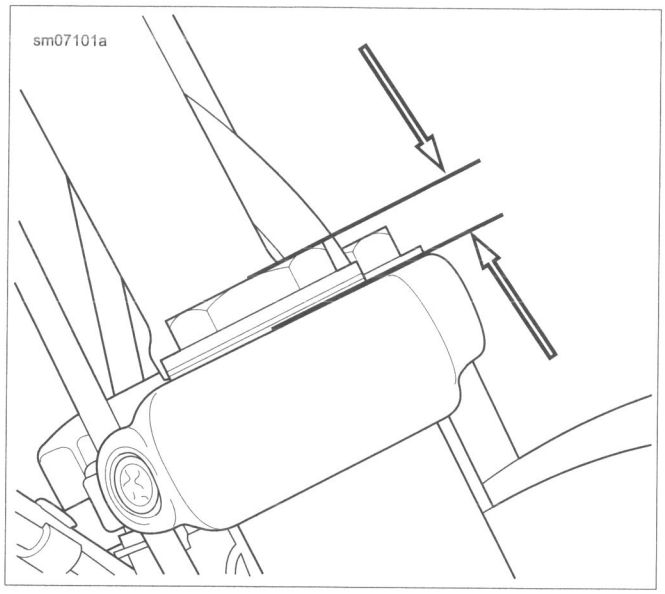

Figure 2-109. Fork Tube Protrusion

BELT GUARD REMOVAL

1. See Figure 2-110. Remove front fastener (1) and washer (2).
2. Remove rear fastener (3) and washer (2) from nut (8).
3. Lift belt guard (9) away from rear fork.
4. Disassemble belt guard by removing grommets (7) and spacers (6).

BELT GUARD INSTALLATION

FASTENER	TORQUE VALUE	
Front belt guard fastener	120-180 **in-lbs**	13.6-20.3 Nm
Rear belt guard fastener	120-180 **in-lbs**	13.6-20.3 Nm

1. See Figure 2-110. If removed, install grommets (7) and spacers (6) on belt guard.
2. Place assembled belt guard over front and rear tabs on rear fork.
3. Loosely install front fastener (1) and washer (2).
4. Loosely install rear fastener (3) and washer (2) with nut (8).
5. Tighten front fastener (1) to 120-180 **in-lbs** (13.6-20.3 Nm).
6. Tighten rear fastener (3) and nut (8) to 120-180 **in-lbs** (13.6-20.3 Nm).
7. Verify that belt guard does not contact belt during rear fork travel.

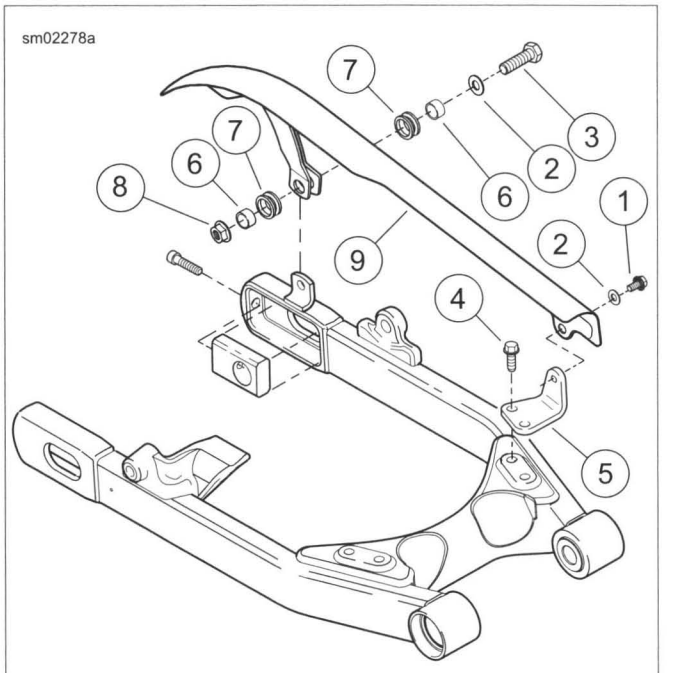

1. **Front fastener**
2. **Washer (2)**
3. **Rear fastener**
4. **Screw, belt guard bracket (2)**
5. **Belt guard bracket (FXDF model only)**
6. **Spacer (2)**
7. **Grommet (2)**
8. **Nut**
9. **Belt guard**

Figure 2-110. Belt Guard

DEBRIS DEFLECTOR REMOVAL

See Figure 2-111. Remove three screws to detach debris deflector from rear fork.

DEBRIS DEFLECTOR INSTALLATION

FASTENER	TORQUE VALUE	
Debris deflector screws	40-60 **in-lbs**	4.5-6.8 Nm

See Figure 2-111. Attach debris deflector to rear fork using three screws. Tighten to 40-60 **in-lbs** (4.5-6.8 Nm).

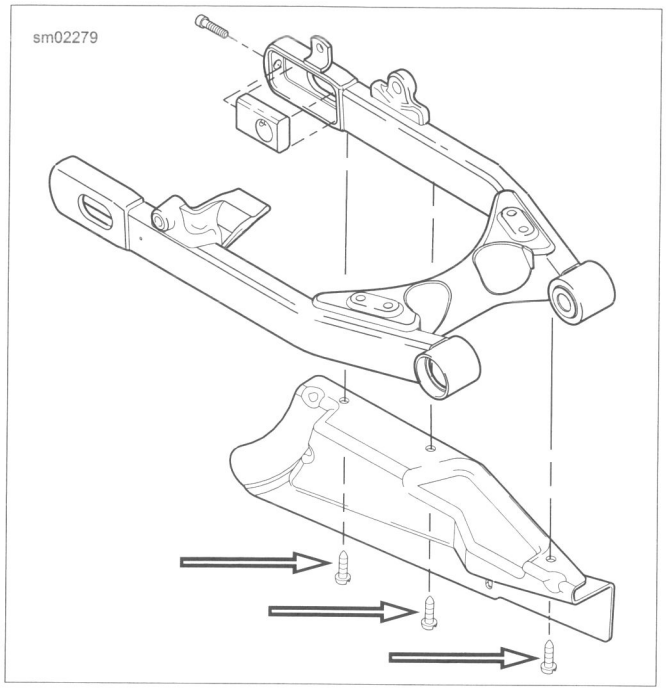

Figure 2-111. Debris Deflector Screws

REMOVAL/DISASSEMBLY

1. See Figure 2-112. Loosen cable adjuster jamnuts.
2. Rotate throttle cable adjuster until it is as short as possible.
3. Remove the two screws that hold the handlebar housing together to separate the upper and lower housings.
4. Remove the ferrules and cables from the throttle grip and lower housing.
5. Remove air cleaner assembly. See 4.3 AIR CLEANER ASSEMBLY, Removal, All But HO103.
6. Disconnect throttle cables from induction module.
7. See Figure 2-113. Apply a drop of oil to the retaining ring holding each cable assembly in the lower housing.
8. Using a rocking motion, firmly pull the bent tubing portion of each cable assembly out of the housing.

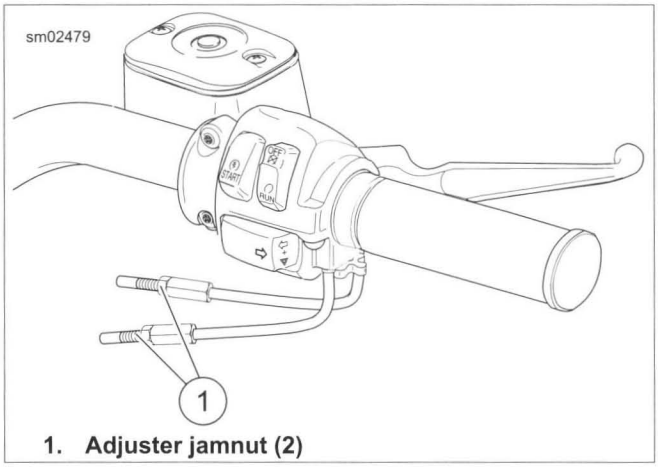

1. Adjuster jamnut (2)

Figure 2-112. Handlebar Throttle Control

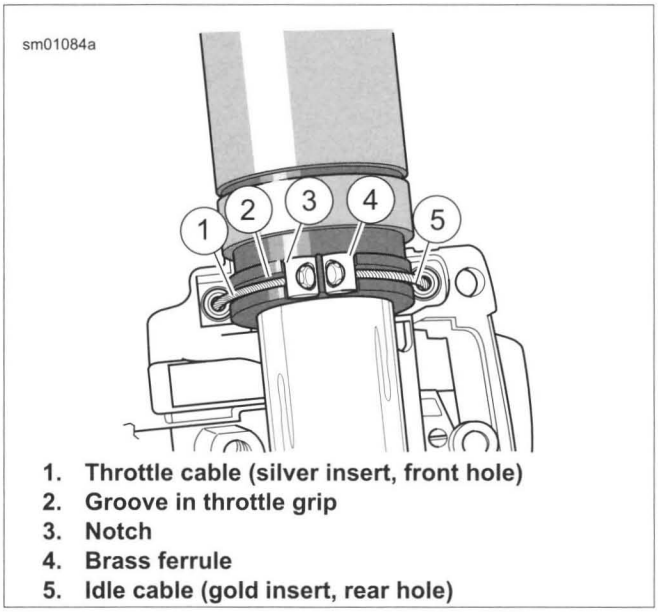

1. **Throttle cable (silver insert, front hole)**
2. **Groove in throttle grip**
3. **Notch**
4. **Brass ferrule**
5. **Idle cable (gold insert, rear hole)**

Figure 2-113. Throttle Cable Attachment

CLEANING AND INSPECTION

⚠WARNING

Compressed air can pierce the skin and flying debris from compressed air could cause serious eye injury. Wear safety glasses when working with compressed air. Never use your hand to check for air leaks or to determine air flow rates. (00061a)

1. Wash all components in non-flammable cleaning solvent. Blow parts dry with low pressure compressed air.
2. Replace the control cables if frayed, kinked or bent.
3. Put one or two drops of oil into the housing of each control cable.

ASSEMBLY/INSTALLATION

FASTENER	TORQUE VALUE	
Hand control module screws	35-45 **in-lbs**	4.0-5.1 Nm

1. Apply a light coating of graphite to handlebar and inside surface of housings.
2. See Figure 2-113. Attach the control cable assemblies to the lower housing.
   a. Push the silver insert of the throttle cable (1) housing into the hole in front of the tension adjuster screw.
   b. Push the gold insert of the idle cable (5) housing into the hole at the rear of the tension adjuster screw.
   c. Install adjusting screw, spring and friction pad in the lower housing if they were removed.
3. Position the throttle grip on the handlebar. Place the lower housing on the throttle.
4. Position the ferrules and retaining rings over the cable balls and seat them in the throttle notches.

⚠WARNING

Do not tighten throttle friction adjustment screw to the point where the engine will not return to idle automatically. Over-tightening can lead to loss of vehicle control, which could result in death or serious injury. (00031b)

5. Fasten upper housing to lower housing using two screws. Tighten to 35-45 **in-lbs** (4.0-5.1 Nm).
6. Check throttle cable routing.
7. Install throttle cables and adjust. See 1.12 THROTTLE CABLES
8. Install air cleaner.

THROTTLE CABLE ROUTING

⚠WARNING

Pinched throttle cables can restrict throttle response, which could result in loss of control and death or serious injury. (00423b)

⚠WARNING

Be sure that steering is smooth and free without interference. Interference with steering could result in loss of vehicle control and death or serious injury. (00371a)

- Make sure throttle/idle control cables do not pull tight when handlebars are turned fully to left or right fork stops.
- Make sure that cables are not pinched between the frame and/or forks.

NOTE

Install cable straps securing throttle cables to frame so that tail of cable faces top of vehicle. Using this method verifies proper placement of cables.

See Figure 2-114 and Figure 2-115. Throttle cables are routed behind front fork upper bracket. Then routed under right side of tank to induction module.

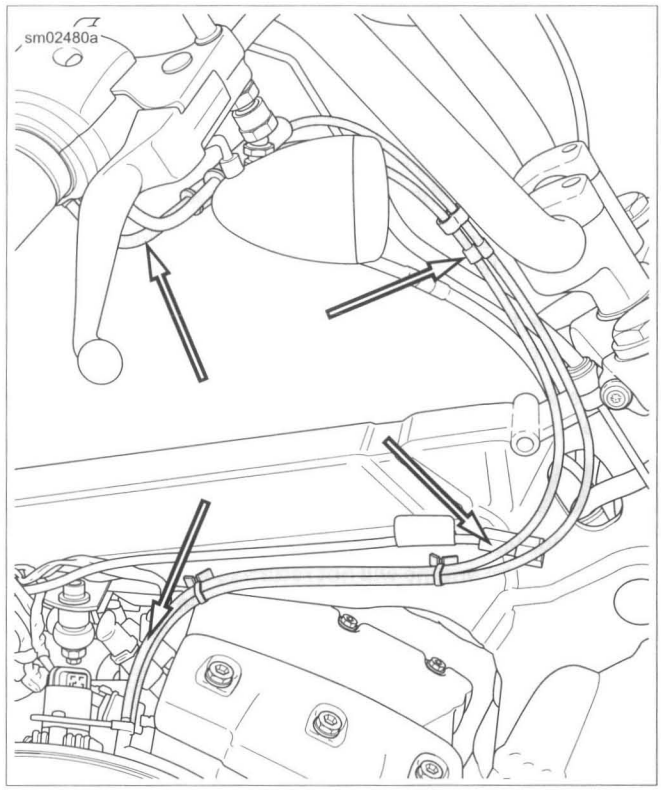

Figure 2-114. Throttle Cable Routing: FXDWG, FXDF (Typical)

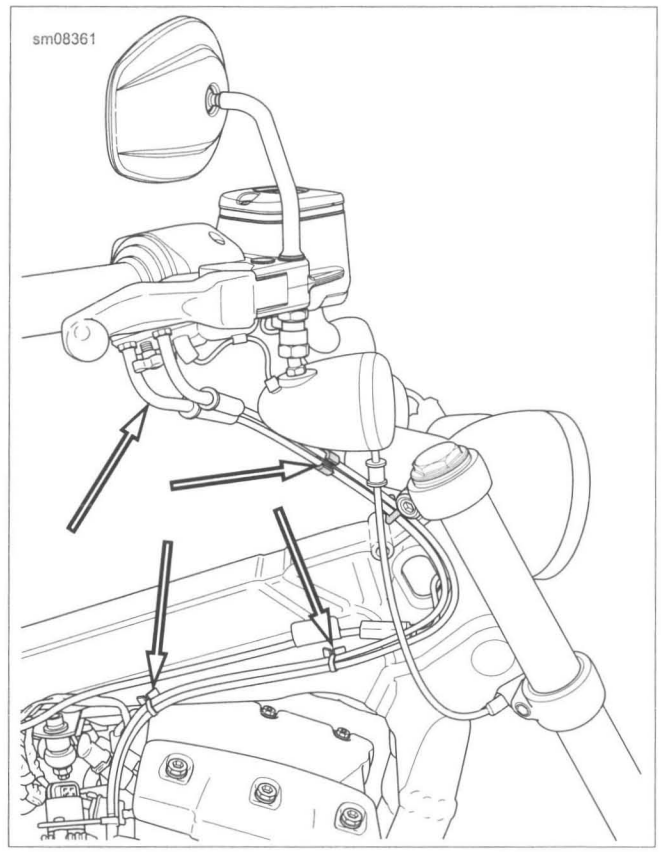

Figure 2-115. Throttle Cable Routing: FXDL

GENERAL

If a lift is not available, service one shock absorber at a time.

For information on preload adjustment and suspension settings, see 1.21 SUSPENSION ADJUSTMENTS.

REMOVAL

1. Raise the rear of the motorcycle.
2. See Figure 2-116. Remove lower mounting screw (1). Jamnut (9) is only used on left side.
3. Remove upper mounting nut (2), washer (4), shock absorber (5), and cover (3).
4. Repeat for other shock absorber.
5. If removing stud (6), remove nut (8) and hardened washer (7).

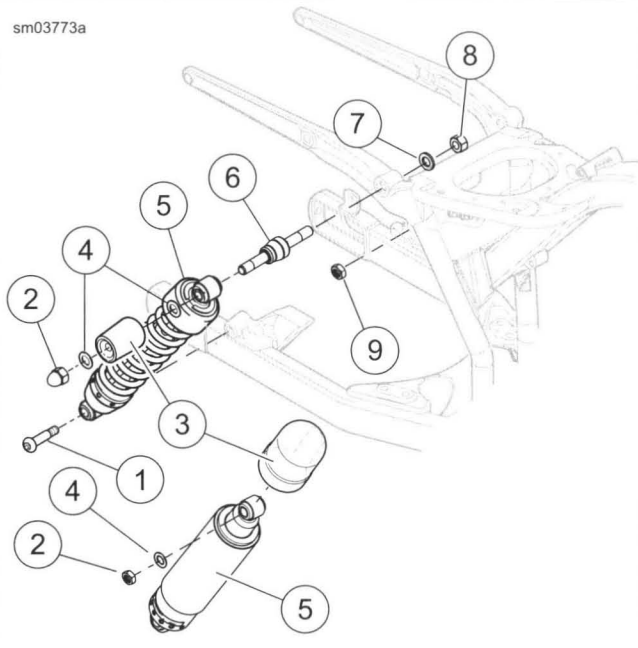

1. **Lower mounting screw (2)**
2. **Upper mounting nut (2)**
3. **Cover, chrome (FXDB only, full top cover FLD only) (2)**
4. **Washer (4)**
5. **Shock absorber (2)**
6. **Stud (2)**
7. **Hardened washer (2)**
8. **Nut (2)**
9. **Jamnut (lower-left side only)**

Figure 2-116. Rear Shock Absorber Mounting

INSPECTION

NOTE

Shocks are non-repairable items, except for the rubber mounting bushings. Replace leaking or damaged shocks as an assembly.

1. Inspect the rubber mounting bushings for cracks or wear.
   a. Inspect the shock for leaks.

   NOTE

   The unit should not leak and should compress slightly easier than it extends.

   b. Compare the action of the shock with a **new** one to judge if it is worn.
   c. Replace the shock if necessary.
2. Inspect shock mounting hardware. Replace or clean if necessary.

INSTALLATION

FASTENER	TORQUE VALUE	
Shock mounting stud nut, inner	75-85 ft-lbs	101.7-115.2 Nm
Shock mounting fastener, lower	30-40 ft-lbs	40.7-54.2 Nm
Shock mounting fastener, upper	30-40 ft-lbs	40.7-54.2 Nm

1. See Figure 2-116. If removed, install stud (6), hardened washer (7) and nut (8). Tighten to 75-85 ft-lbs (101.7-115.2 Nm).
2. Fasten each shock to the frame and rear fork using the original hardware.
3. Attach lower shock mount to rear fork.
   a. Apply two to three drops of LOCTITE 243 MEDIUM STRENGTH THREADLOCKER AND SEALANT (blue) to threads of lower mounting screw (1).
   b. Install lower mounting screw and hand tighten.
4. Apply two to three drops of LOCTITE 243 MEDIUM STRENGTH THREADLOCKER AND SEALANT (blue) to threads of upper mounting nut (2).
   a. Install cover (3), shock absorber (5), and washer (4).
   b. Install upper mounting nut (2) finger-tight.
5. Tighten upper nut and lower shock mount screws:
   a. Lower mount: 30-40 ft-lbs (40.7-54.2 Nm)
   b. Upper mount: 30-40 ft-lbs (40.7-54.2 Nm)
6. Adjust shocks if needed. See 1.21 SUSPENSION ADJUSTMENTS.

REMOVAL

1. Remove exhaust system. See 4.15 EXHAUST SYSTEM.
2. Remove rear brake caliper. See 2.13 REAR BRAKE CALIPER.
3. Remove rear wheel. See 2.5 REAR WHEEL.
4. Remove lower shock absorber fasteners and swing shock absorbers away from rear fork. See 2.22 REAR SHOCK ABSORBERS.
5. Remove belt guard and debris deflector. See 2.20 BELT GUARD AND DEBRIS DEFLECTOR.
6. Remove rear brake line clamp from rear fork.
7. See Figure 2-117. Remove plug (2).
8. Remove nut (3).
9. Remove pivot shaft (4) with attached nut. Support rear fork (1). Pull assembly from frame.

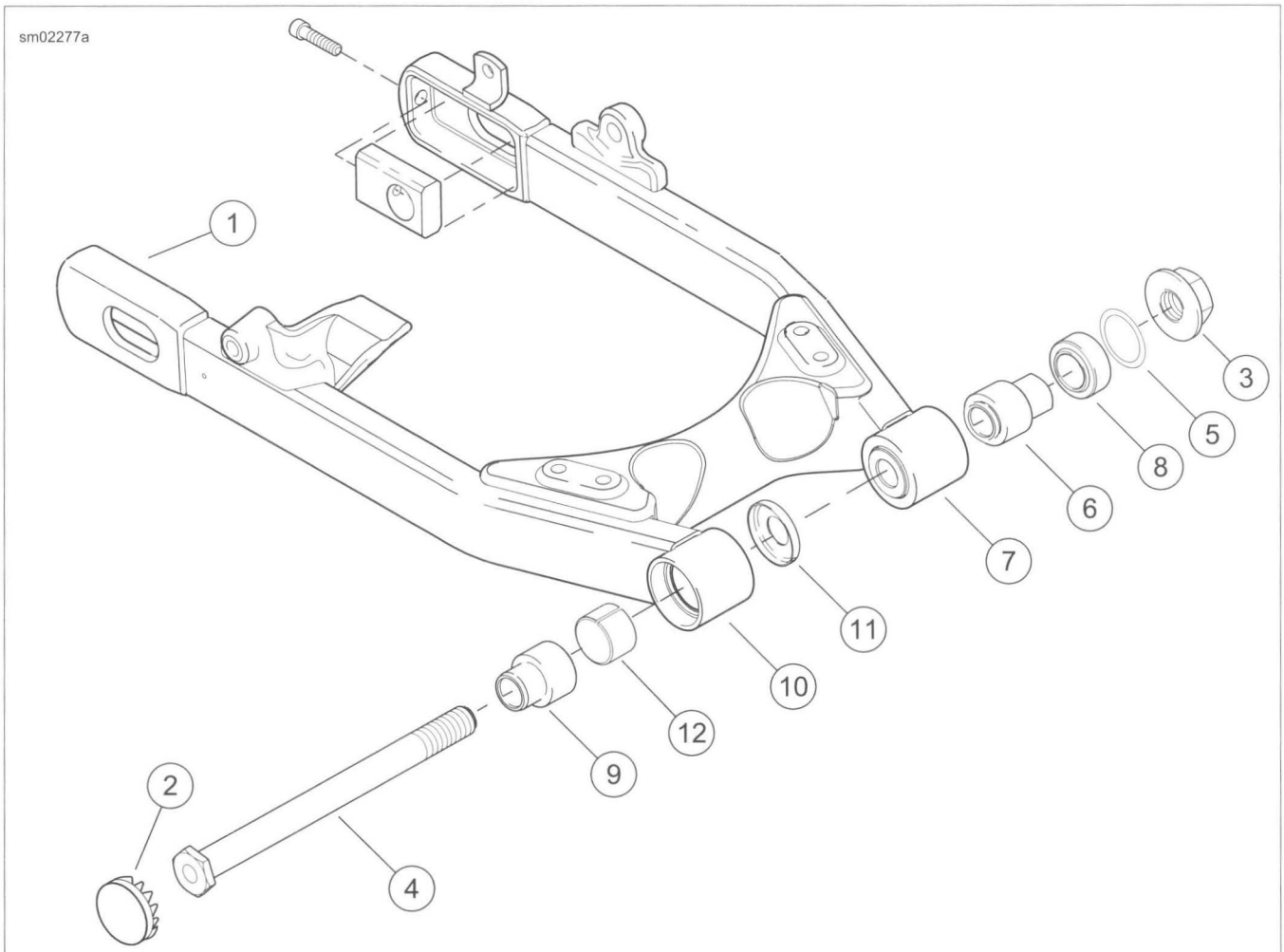

1. **Rear fork**
2. **Plug**
3. **Nut**
4. **Pivot shaft**
5. **Retaining ring**
6. **Left spacer**
7. **Left boss**
8. **Pivot bearing**
9. **Right spacer**
10. **Right boss**
11. **Dust shield**
12. **Bushing**

Figure 2-117. Rear Fork

DISASSEMBLY

Carefully mark all components as they are removed, so components can be easily returned to their original locations.

NOTE

See Figure 2-117. The pivot bearing (8) is lifetime lubricated and requires no further attention other than cleaning. Only disassemble components from left boss of fork if they are damaged.

1. Remove retaining ring (5), push or with a brass drift tap left spacer (6) inboard to remove it from left boss (7).
2. From inboard side, press or drive pivot bearing (8) from left boss.
3. Push or with a brass drift tap right spacer (9) outboard to remove it from right boss (10).
4. Press bushing (12) and dust shield (11) from fork assembly.

CLEANING AND INSPECTION

See Figure 2-117. Clean the bearing bore of rear fork with a clean shop towel, removing any dirt or grit adhering to the bearing surface.

1. Inspect bearing components for damage or corrosion. Replace if necessary.
2. Replace bent or twisted rear forks.

ASSEMBLY

FASTENER	TORQUE VALUE	
Rear fork brake hose J-clip	40-60 **in-lbs**	4.5-6.8 Nm

1. See Figure 2-117. If necessary, install **new** pivot bearing (8). Press **new** bearing from outboard side until outer race is seated against shoulder in left boss (7).
2. Install retaining ring (5) and left spacer (6). The spacer must be inserted from the inboard side.
3. If bushing (12) must be replaced, press the bushing and dust shield (11) into the fork bore so dust shield is flush to 0.060 in (1.50 mm) above fork bore.
4. Coat right spacer (9) with WHEEL BEARING GREASE. Insert spacer into bushing with chamfered end facing inward.
5. See Figure 2-118. If removed, align J-clip as shown and install screw. Tighten to 40-60 **in-lbs** (4.5-6.8 Nm). Do not allow clip to pass above top of rear fork.

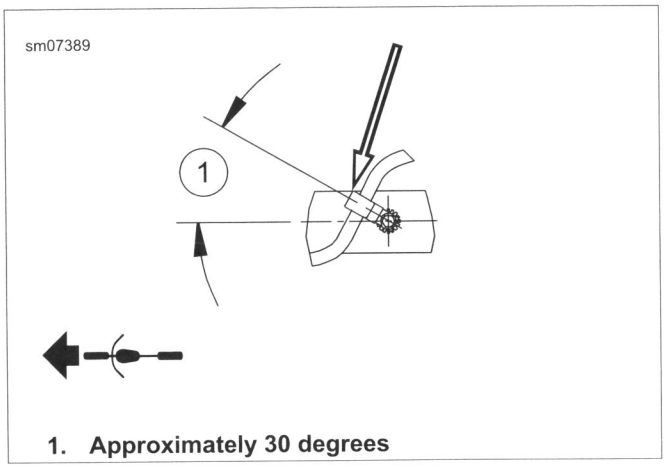

1. Approximately 30 degrees

Figure 2-118. Brake Line J-Clip at Rear Fork

INSTALLATION

FASTENER	TORQUE VALUE	
Pivot shaft nut	70-77 ft-lbs	95.0-104.5 Nm

1. Coat pivot shaft with ANTI-SEIZE LUBRICANT.
2. Slide rear fork assembly into position on mounting boss of transmission case.
3. See Figure 2-117. Hold fork assembly in position. Install the pivot shaft (4) with attached nut from right side. Install nut (3) on threads of pivot shaft. Tighten nut to 70-77 ft-lbs (95.0-104.5 Nm).
4. Swing shock absorbers into position. Install lower shock absorber fasteners. See 2.22 REAR SHOCK ABSORBERS.
5. Install rear brake caliper. See 2.13 REAR BRAKE CALIPER.
6. Install rear brake line in clamp mounted on rear fork.
7. Install rear wheel and adjust drive belt deflection. See 2.5 REAR WHEEL.
8. Install belt guard and debris deflector. See 2.20 BELT GUARD AND DEBRIS DEFLECTOR.
9. Install exhaust system. See 4.15 EXHAUST SYSTEM.

REMOVAL

1. Loosen clutch adjuster so clutch cable is fully slack. See 1.10 CLUTCH, Adjustment.

⚠WARNING

Wear safety glasses or goggles when removing or installing retaining rings. Retaining rings can slip from the pliers and could be propelled with enough force to cause serious eye injury. (00312a)

2. See Figure 2-119. Remove the anchor pin (1) from the hand lever. To remove anchor pin, remove the retaining ring (2) and pivot pin (4).
3. Drain transmission. Remove transmission side cover. See 6.5 CLUTCH RELEASE COVER.
4. See Figure 2-120. Note position of retaining ring opening (6). Retaining ring opening must be positioned in approximately the same location during assembly. Remove retaining ring (4).
5. Pull inner ramp and ramp coupling (3) out of side cover. Hold inner and outer ramps together to keep balls from falling free.
6. Rotate the inner ramp to a position which allows the coupling to be disconnected from the inner ramp lever arm. Disconnect coupling from inner ramp. Disconnect clutch cable end (2) from coupling.
7. Unscrew cable fitting (1) from side cover.

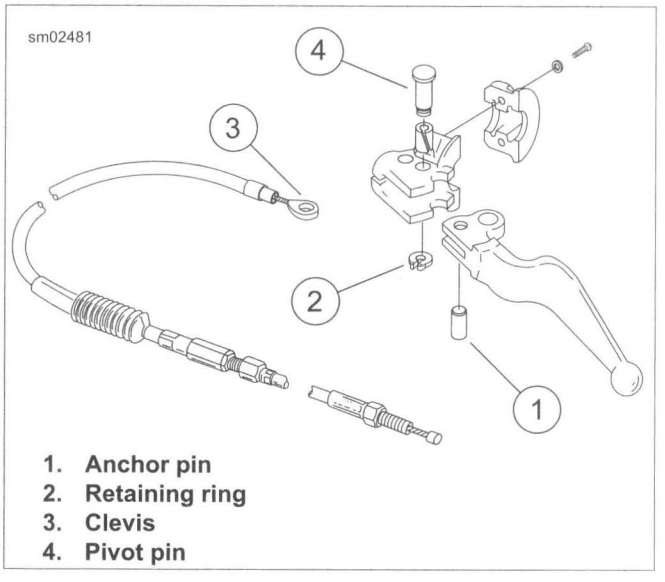

1. **Anchor pin**
2. **Retaining ring**
3. **Clevis**
4. **Pivot pin**

Figure 2-119. Clutch Cable Installation

INSTALLATION

1. See Figure 2-120. Apply a drop of LOCTITE 243 MEDIUM STRENGTH THREADLOCKER AND SEALANT (blue) to clutch cable fitting (1). Screw fitting (with O-ring) into clutch release cover. Leave fasteners loose.
2. Connect cable end to ramp coupling (3). Rotate ramps for best access. Install coupling on inner ramp. Place ramp assembly in position in side cover.

⚠WARNING

Wear safety glasses or goggles when removing or installing retaining rings. Retaining rings can slip from the pliers and could be propelled with enough force to cause serious eye injury. (00312a)

3. Install retaining ring (4). Position retaining ring opening (6) to the right of the outer ramp tang (the stop that prevents rotation).
4. Place **new** gasket on side cover. Install cover, fully tightening the clutch cable fitting. See 6.5 CLUTCH RELEASE COVER.
5. Place a few drops of oil inside cable housing.

NOTES

- *Anchor pin does not require lubrication.*
- *When clutch cable is installed, route cable in front of the handlebar for all models except FXDB. Install clutch cable behind the handlebar on FXDB models.*

6. Check that clutch cable is properly routed along left side of steering head, behind the fork brackets and through the clips on front frame crossmember.
7. See Figure 2-119. Insert anchor pin (1) through handle and clevis (3).
8. Place handle in bracket. Install pivot pin (4) and retaining ring (2).
9. Adjust clutch. See 1.10 CLUTCH, Adjustment.

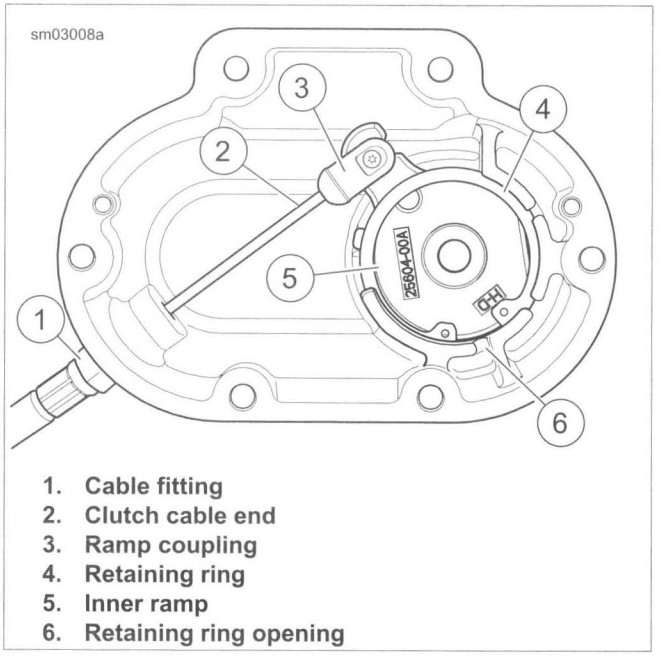

1. **Cable fitting**
2. **Clutch cable end**
3. **Ramp coupling**
4. **Retaining ring**
5. **Inner ramp**
6. **Retaining ring opening**

Figure 2-120. Clutch Cable Connection

REMOVAL

⚠WARNING

To prevent accidental vehicle start-up, which could cause death or serious injury, disconnect negative (-) battery cable before proceeding. (00048a)

1. Disconnect negative battery cable.
2. Cover painted parts to protect finish.
3. Remove front master cylinder assembly. See 2.10 FRONT BRAKE MASTER CYLINDER.
4. Remove clutch control assembly. See 2.24 CLUTCH CONTROL.
5. Remove right and left handlebar switch assemblies and throttle. See 7.35 RIGHT HANDLEBAR CONTROL MODULE and 7.34 LEFT HANDLEBAR CONTROL MODULE.

NOTE

Original equipment left grip is glued in place. Remove grip by cutting off only if necessary.

6. If removing left handlebar grip, slice grip open with a sharp knife. Peel grip off handlebar. See 2.25 HANDLEBAR: FLD, Left Hand Grip.
7. Remove windshield.
8. Remove headlamp assembly from nacelle. See 7.12 HEADLAMP.

NOTE

See Figure 2-121. If removing risers, loosen handlebar riser fasteners (8) before removing upper handlebar clamp.

9. Remove upper handlebar clamp fasteners (1).
10. Remove upper handlebar clamp (2).
11. Remove handlebar.
12. If removing risers (3), remove two handlebar riser fasteners (8), lockwashers (7) and risers from upper fork bracket.
13. Replace bushings (5) if necessary.

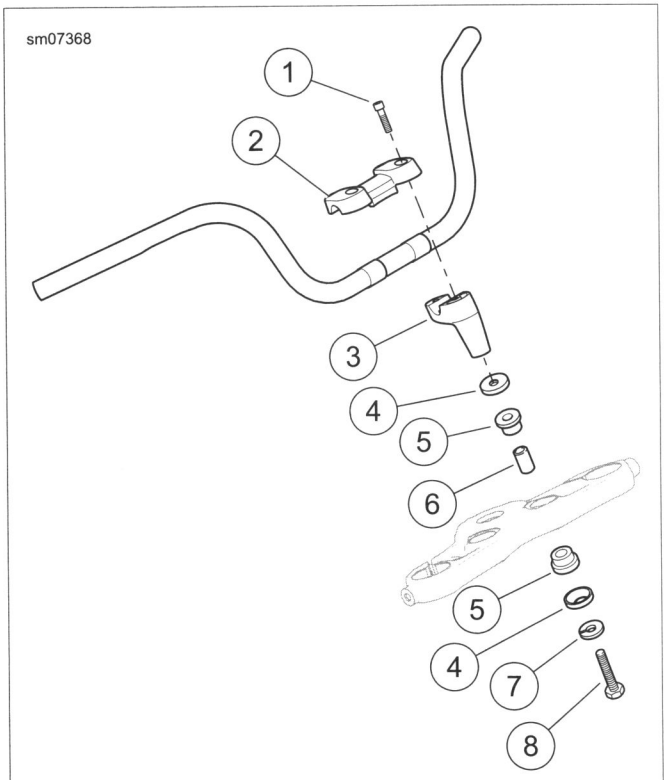

1. **Upper handlebar clamp fastener (4)**
2. **Upper handlebar clamp**
3. **Riser (2)**
4. **Cup washer (4)**
5. **Bushing (4)**
6. **Spacer (2)**
7. **Lockwasher (2)**
8. **Handlebar riser fastener (2)**

Figure 2-121. Handlebars: FLD

INSTALLATION

FASTENER	TORQUE VALUE	
Upper handlebar clamp fastener, front: all	12-16 ft-lbs	16.3-21.7 Nm
Upper handlebar clamp fastener, rear: all	12-16 ft-lbs	16.3-21.7 Nm
Handlebar riser fastener: FLD	30-40 ft-lbs	40.7-54.2 Nm
Control module housing screw	35-45 **in-lbs**	4.0-5.1 Nm
Control module housing screw	35-45 **in-lbs**	4.0-5.1 Nm
Battery terminal screw	60-70 **in-lbs**	6.8-7.9 Nm

NOTES

- *Always make sure that cup washers, bushings and spacers are in position in upper fork bracket before installing handlebars or risers.*
- *On some models, upper handlebar clamp hides knurled areas of handlebar. These areas are not visible when handlebar is centered properly.*

1. See Figure 2-121. If risers (3) were removed, install lockwashers (7) on handlebar riser fasteners (8).
2. Loosely secure risers to upper fork bracket.
3. Place handlebars on risers. Install upper handlebar clamp (2) but do not tighten upper handlebar clamp fasteners (1).
4. Using knurled areas of handlebar as a guide, center handlebars between handlebar risers.
5. See Figure 2-122. Place a straight edge across the windshield bushings.
6. Measure from the straight edge to the front of the handlebar just below the top bend.
7. Rotate the handlebar in the risers until the gap measures 1.370 in (34.8 mm).
8. See Figure 2-121. Secure handlebars in clamp:
   a. Tighten two rear fasteners (1) until cast-in spacers contact risers.
   b. Tighten front fasteners to 12-16 ft-lbs (16.3-21.7 Nm).
   c. Final tighten rear fasteners to 12-16 ft-lbs (16.3-21.7 Nm). Slight gap between upper clamp and handlebar risers should exist at front.
9. Tighten riser fasteners to 30-40 ft-lbs (40.7-54.2 Nm).
10. Install headlamp. See 7.12 HEADLAMP.
11. Install windshield.
12. Install a **new** left hand grip, if necessary. See 2.25 HANDLEBAR: FLD, Left Hand Grip.
13. Install right and left handlebar control module assemblies and throttle. Leave fasteners loose. See 7.35 RIGHT HANDLEBAR CONTROL MODULE and 7.34 LEFT HANDLEBAR CONTROL MODULE.
14. Install clutch control assembly. See 2.24 CLUTCH CONTROL.
15. Install front brake master cylinder. See 2.10 FRONT BRAKE MASTER CYLINDER.
16. Tighten:
   a. Left hand control module clamp screws to 35-45 **in-lbs** (4.0-5.1 Nm).
   b. Right hand control module clamp screws to 35-45 **in-lbs** (4.0-5.1 Nm).
17. Connect negative battery cable. Tighten to 60-70 **in-lbs** (6.8-7.9 Nm).
18. Test front brake lever for pressure and operation.
19. Test throttle for correct operation. Adjust as required. See 1.12 THROTTLE CABLES.
20. Test switches for proper operation.

⚠WARNING

Be sure that all lights and switches operate properly before operating motorcycle. Low visibility of rider can result in death or serious injury. (00316a)

21. Check operation of all lamps.

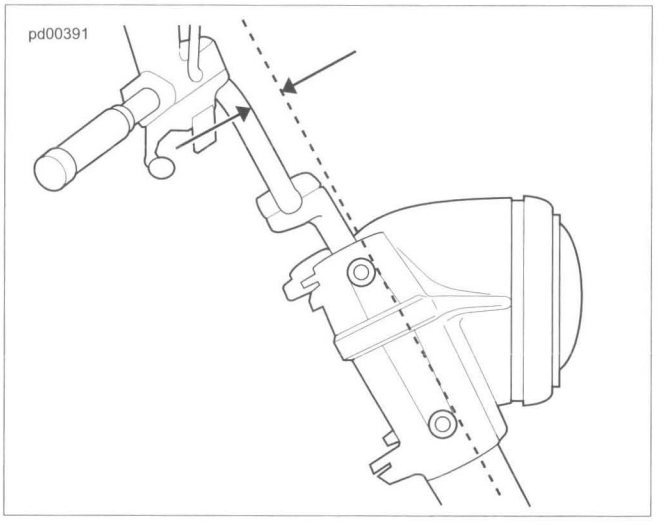

Figure 2-122. Handlebar Adjustment: FLD, FLD103

LEFT HAND GRIP

Removal

Slice hand grip open with a sharp knife. Peel hand grip open to remove.

Installation

1. Rough left grip end of handlebar with emery cloth.
2. Clean grip end with acetone.
3. Apply LOCTITE 770 PRISM PRIMER to inside of a **new** hand grip. Remove any excess primer with a clean cloth. Wait two minutes for the primer to set.
4. Apply LOCTITE 411 PRISM INSTANT ADHESIVE to inside of **new** hand grip.

NOTE

LOCTITE 411 PRISM INSTANT ADHESIVE sets in four minutes and cures in 24 hours.

5. Install **new** hand grip with a twisting motion.

REMOVAL

⚠WARNING

To prevent accidental vehicle start-up, which could cause death or serious injury, disconnect negative (-) battery cable before proceeding. (00048a)

1. Disconnect negative battery cable.
2. Remove instrument panel. See 7.21 INSTRUMENTS: FXDF AND FLD or 7.22 INSTRUMENTS: FXDB, FXDBC, FXDBP AND FXDWG.
3. Disconnect fuel gauge connector.
4. Remove fuel tank fasteners, vent, fuel supply fitting and slide fuel tank back. See 4.4 FUEL TANK.
5. Cover painted parts to protect finish.
6. Disconnect all hand control connectors from main harness.
7. Remove terminals from turn signal connector. See electrical diagnostic manual.
8. Remove front master cylinder assembly. See 2.10 FRONT BRAKE MASTER CYLINDER.
9. Remove clutch control assembly from handlebar. See 2.24 CLUTCH CONTROL.
10. Separate right handlebar control module housing. Remove throttle. See 7.35 RIGHT HANDLEBAR CONTROL MODULE.

NOTE

Original equipment left handlebar grip is glued in place. Remove grip by cutting off only if necessary.

11. If removing left handlebar grip, slice grip open with a sharp knife. Peel grip off handlebar.
12. Remove control module housings, turn signals and wiring from handlebars.

FXDB, FXDBC, FXDBP

1. See Figure 2-123. If removing handlebar risers (4, 5), loosen, but do not remove two lower handlebar riser fasteners (11).
2. Remove upper handlebar clamp fasteners (1).
3. Remove upper handlebar clamp (2).
4. Remove handlebar (3).
5. Remove two handlebar riser fasteners (11) and lockwashers (10).
6. Remove right and left handlebar risers (4, 5) from upper fork bracket (9). Replace bushings (7) if necessary.
7. See Figure 2-124 for mini-ape, pullback or fat drag bar.

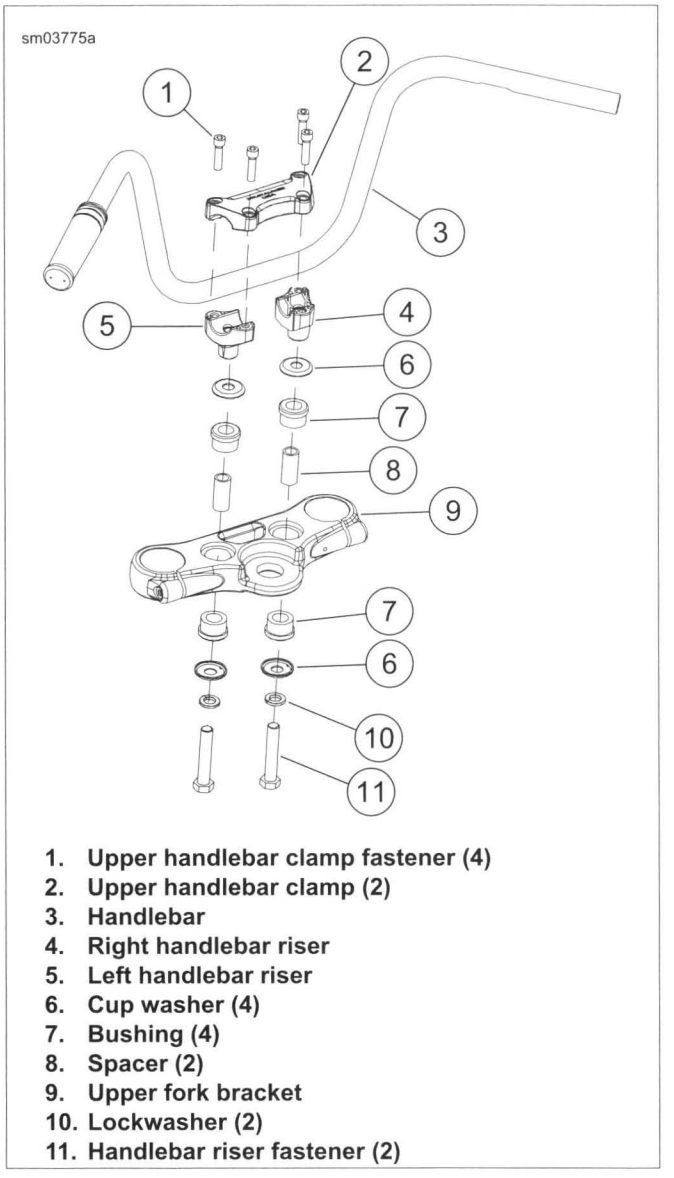

1. **Upper handlebar clamp fastener (4)**
2. **Upper handlebar clamp (2)**
3. **Handlebar**
4. **Right handlebar riser**
5. **Left handlebar riser**
6. **Cup washer (4)**
7. **Bushing (4)**
8. **Spacer (2)**
9. **Upper fork bracket**
10. **Lockwasher (2)**
11. **Handlebar riser fastener (2)**

Figure 2-123. Handlebar: FXDB/P

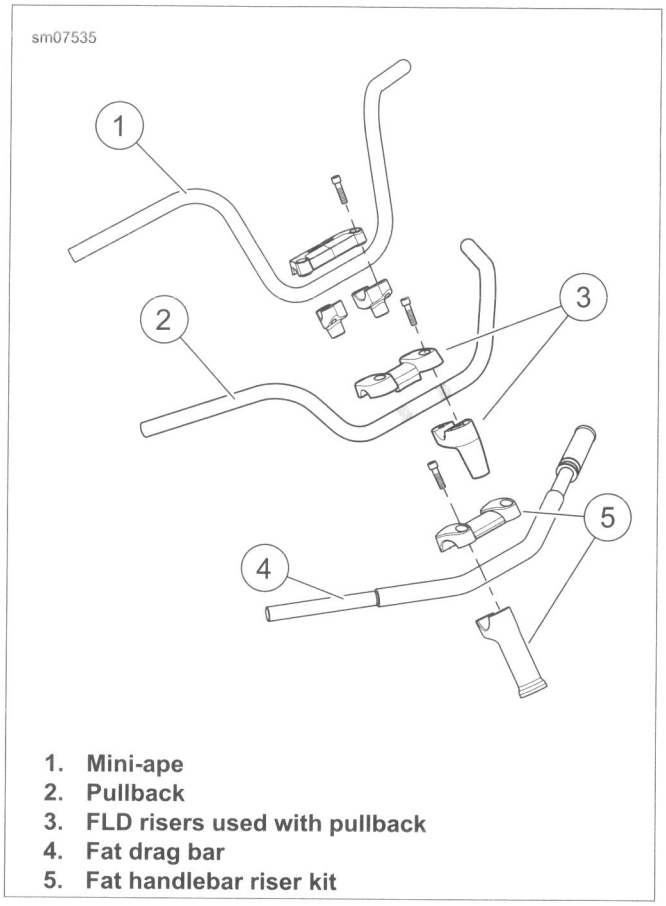

1. **Mini-ape**
2. **Pullback**
3. **FLD risers used with pullback**
4. **Fat drag bar**
5. **Fat handlebar riser kit**

Figure 2-124. Handlebar Options: FXDBP

FXDF and FXDWG

1. See Figure 2-125 or Figure 2-126. Remove upper handlebar clamp fasteners (1) and upper handlebar clamp (2). Remove handlebar (3).
2. If removing handlebar risers (4), remove two handlebar riser fasteners (9), lockwashers (8) and handlebar risers from upper fork bracket. Replace bushings (6) if necessary.

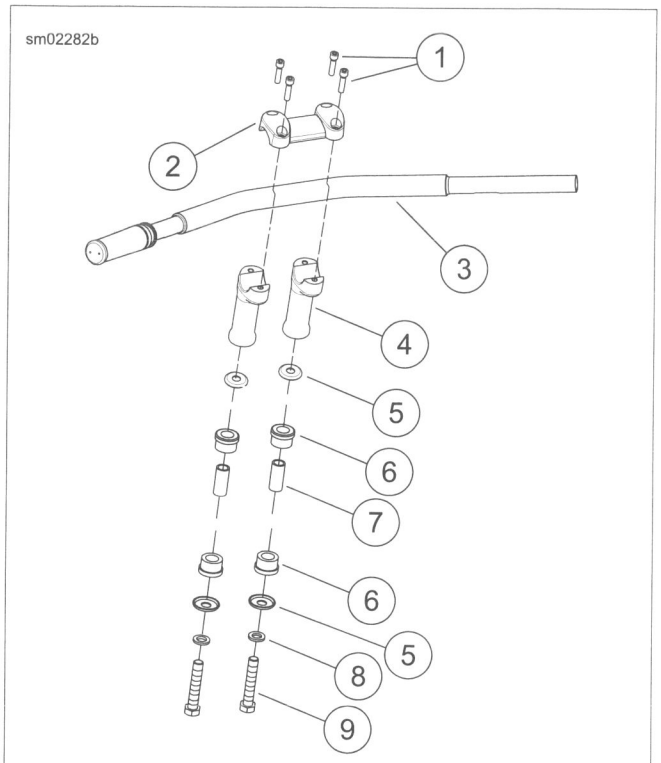

1. **Upper handlebar clamp fasteners (4)**
2. **Upper handlebar clamp**
3. **Handlebar**
4. **Handlebar riser (2)**
5. **Cup washers (4)**
6. **Bushings (4)**
7. **Spacer (2)**
8. **Lockwasher (2)**
9. **Handlebar riser fastener (2)**

Figure 2-125. Fat Drag Bar with Risers, FXDF

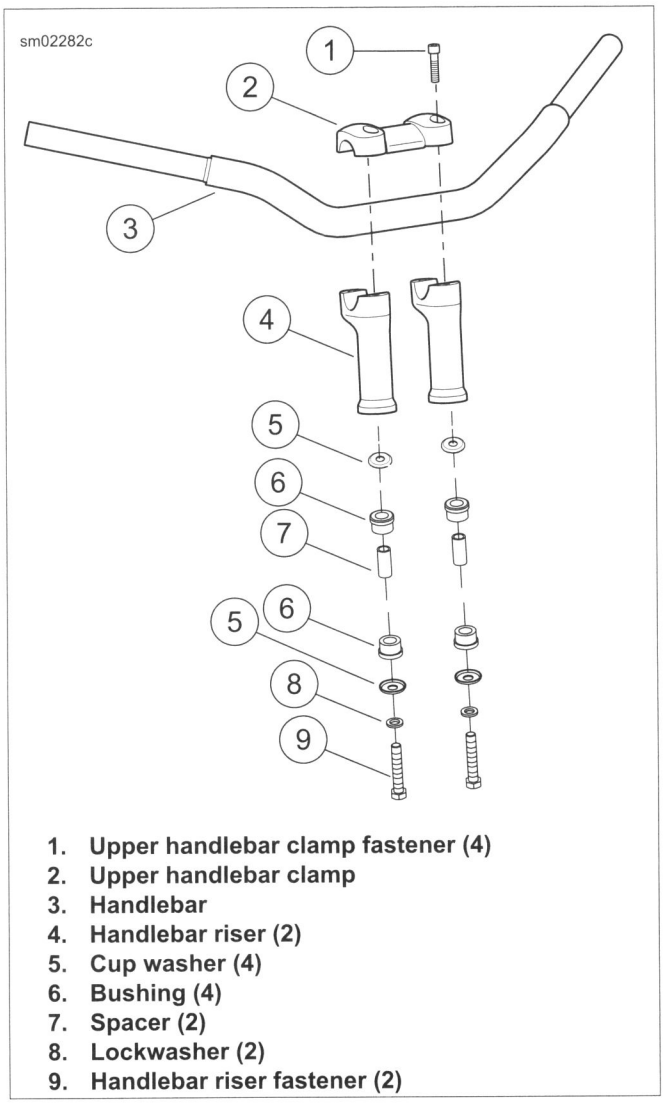

1. **Upper handlebar clamp fastener (4)**
2. **Upper handlebar clamp**
3. **Handlebar**
4. **Handlebar riser (2)**
5. **Cup washer (4)**
6. **Bushing (4)**
7. **Spacer (2)**
8. **Lockwasher (2)**
9. **Handlebar riser fastener (2)**

Figure 2-126. Handlebar: FXDWG

INSTALLATION

FASTENER	TORQUE VALUE	
Upper handlebar clamp fastener: FXDB, FXDBC, FXDBP, FXDF, FXDWG, final tightening	12-16 ft-lbs	16.3-21.7 Nm
Handlebar riser fastener: FXDF, FXDWG, final tightening	30-40 ft-lbs	40.7-54.2 Nm
Upper handlebar clamp fastener: FXDB, FXDBC, FXDBP, initial tightening	12-16 ft-lbs	16.3-21.7 Nm
Handlebar riser fastener: FXDB, FXDBC, FXDBP final tightening	30-40 ft-lbs	40.7-54.2 Nm
Upper handlebar clamp fastener: FXDB, FXDBC, FXDBP final tightening	12-16 ft-lbs	16.3-21.7 Nm
Negative battery fastener: all	60-70 **in-lbs**	6.8-7.9 Nm

NOTE

The turn signal wires enter the switch housings through a relief grommet in the housing. Support turn signals throughout this procedure to prevent pulling the grommet or the turn sign wires out of the housing.

1. Repair or replace switches, turn signal switches, wires and grommets as necessary.

NOTE

For handlebar switch repair procedures, see 7.33 HANDLEBAR CONTROL MODULES.

2. Wrap wire ends and open ends of conduit with electrical tape.
3. Cut a length of mechanics wire to use as a leader.
4. Lay mechanics wire along the wire harnesses so a few inches overlap. Secure using electrical tape.

⚠WARNING

Grommets in each of the wiring holes in the handlebar must remain in position after routing the wiring through the handlebar. Operation without the grommets in place can damage wires, causing a short circuit which could result in death or serious injury. (00416d)

5. If necessary, replace grommets on handlebar wire openings.
6. Lubricate wire conduits with glass cleaner or isopropyl alcohol.
7. See Figure 2-128. Install the wire leaders through the handlebar grommets and to the center hole.
8. Pull wire bundles through to the handlebar center hole.
9. Loosely install left and right control module housings.
10. Pull slack from wire harnesses and remove the tape and mechanics wire.

11. **FXDF models:** See Figure 2-125. Install handlebar.
    a. If handlebar risers (4) were removed, install lockwashers (8) on handlebar riser fasteners (9).
    b. If removed, install cup washers (5), bushings (6) and spacers (7) in upper fork bracket.
    c. Slide handlebar riser fasteners (9) through upper fork bracket.
    d. Loosely install handlebar risers (4) to upper fork bracket using handlebar riser fasteners.
    e. Place handlebar (3) on handlebar risers. Install upper handlebar clamp (2). Install but do not tighten clamp fasteners (1).
12. **FXDB, FXDBC, FXDBP models:** See Figure 2-123. Place handlebar (3) on risers. Install upper handlebar clamp (2). Install but do not tighten upper handlebar clamp fasteners (1).
13. Connect left and right hand control connectors [22, 24].
14. Connect turn signal connector [31].

NOTE

When clutch control is installed on handlebar, route cable in front of the handlebar for all models except FXDB, FXDBC and FXDBP. Clutch cables on FXDB, FXDBC and FXDBP models are routed behind the handlebar unless a different handlebar is being used.

15. Install clutch control and front master cylinder. Align housings and tighten fasteners. See 2.24 CLUTCH CONTROL and 2.10 FRONT BRAKE MASTER CYLINDER.
16. Install fuel tank. Connect vent hose and fuel supply fitting. See 4.4 FUEL TANK.
17. Connect fuel gauge connector [117].
18. Install instrument console. See 7.21 INSTRUMENTS: FXDF AND FLD or 7.22 INSTRUMENTS: FXDB, FXDBC, FXDBP AND FXDWG.
19. Using knurled areas of handlebar as a guide, center handlebars between handlebar risers.

NOTE

On some models, upper handlebar clamp hides knurled areas of handlebar when handlebar is centered properly.

20. See Figure 2-127. Lay a straightedge against the front of the upper and lower fork brackets. Rotate the handlebar to 3.5 in (89 mm).

NOTE

***FXDF models:** Verify gaps between upper clamp and lower risers are equal front and rear.*

21. **FXDF models:** see Figure 2-125. Tighten upper handlebar clamp:
    a. Tighten front and rear upper handlebar clamp fasteners (1) to 12-16 ft-lbs (16.3-21.7 Nm).
    b. Remove one handlebar riser fastener (9). Apply LOCTITE 271 HIGH STRENGTH THREADLOCKER (red) to fastener threads.
    c. Install fastener. Tighten to 30-40 ft-lbs (40.7-54.2 Nm). Repeat for other fastener.
22. **FXDB, FXDBC, FXDBP models:** see Figure 2-123. Tighten upper handlebar clamp:
    a. Tighten two front upper handlebar clamp fasteners (1) until cast-in spacers contact risers.
    b. Tighten two rear upper handlebar clamp fasteners (1) to 12-16 ft-lbs (16.3-21.7 Nm).
    c. Remove one handlebar riser fastener (11). Apply LOCTITE 271 HIGH STRENGTH THREADLOCKER (red) to fastener threads.
    d. Install fastener. Tighten to 30-40 ft-lbs (40.7-54.2 Nm). Repeat for other fastener.
    e. Tighten two front upper handlebar clamp fasteners (1) to 12-16 ft-lbs (16.3-21.7 Nm).

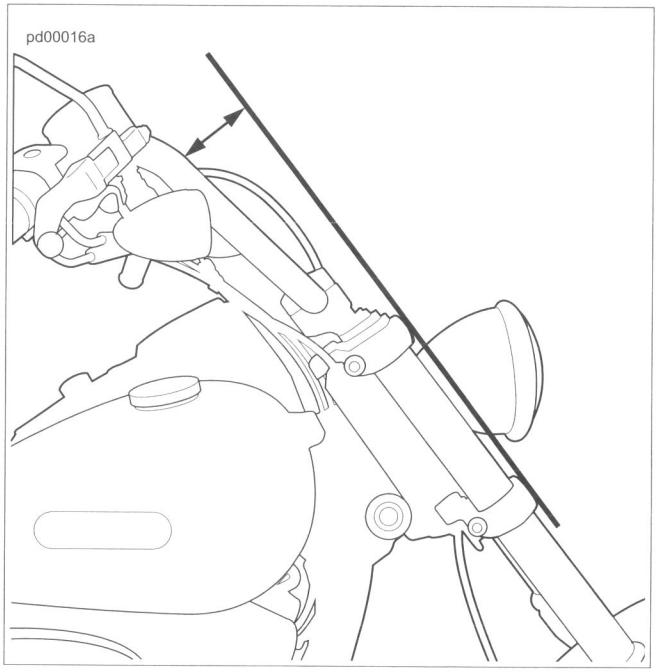

Figure 2-127. Handlebar Adjustment Measurement: FXDB, FXDBC and FXDBP

23. Connect negative battery cable. Tighten to 60-70 **in-lbs** (6.8-7.9 Nm).
24. Test front brake lever for pressure and operation.
25. Test throttle for correct operation. Adjust as required. See 1.12 THROTTLE CABLES.

⚠WARNING

Be sure that all lights and switches operate properly before operating motorcycle. Low visibility of rider can result in death or serious injury. (00316a)

26. Turn ignition switch ON. Test switches for proper operation.
27. Operate brake lever to test stop lamp.

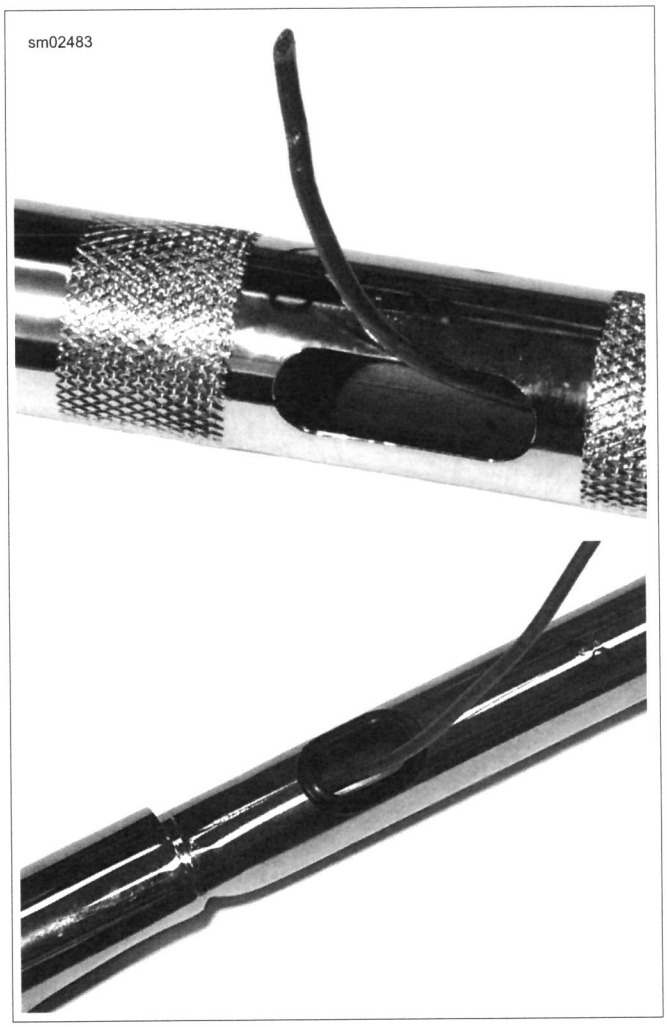

Figure 2-128. Wire Leader in Handlebar (Handlebar Removed from Motorcycle): Typical

REMOVAL

⚠WARNING

To prevent accidental vehicle start-up, which could cause death or serious injury, remove main fuse before proceeding. (00251b)

NOTE

Handlebar bushings are located in the headlamp visor. If handlebar bushing replacement is necessary, see 7.12 HEADLAMP.

1. Remove main fuse.
2. Remove right side steering head plug.
3. Cover painted parts to protect finish.
4. Disconnect all left and right side hand control connectors from connectors on main harness.
5. Pull harnesses through headlamp bracket.
6. Remove front master cylinder assembly. See 2.10 FRONT BRAKE MASTER CYLINDER.
7. Remove clutch control assembly from handlebar. See 2.24 CLUTCH CONTROL.
8. Separate right handlebar control module housing. Remove throttle. See 7.35 RIGHT HANDLEBAR CONTROL MODULE.

NOTE

Original equipment left handlebar grip is glued in place. Remove grip only if necessary. Instructions are given in next step.

9. If removing left handlebar grip, slice grip open with a sharp knife. Peel grip off handlebar.
10. Remove control module housings, turn signals and wiring from handlebars.
11. See Figure 2-129. Remove upper handlebar clamp fasteners (1).
12. Remove upper handlebar clamp (2).
13. Remove handlebar (3).

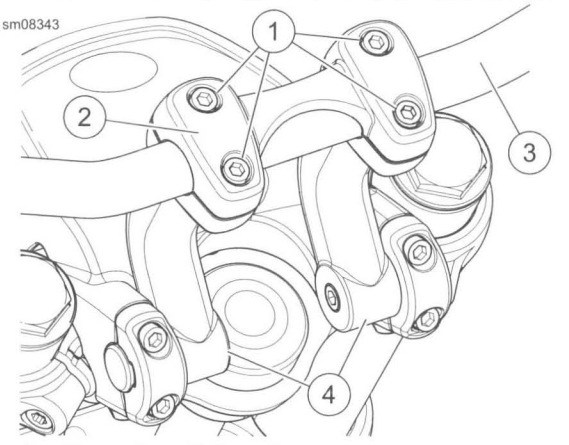

1. **Upper handlebar clamp screws**
2. **Upper handlebar clamp**
3. **Handlebar**
4. **Risers**

Figure 2-129. Handlebar: FXDL

INSTALLATION

FASTENER	TORQUE VALUE	
Handlebar clamp fastener: FXDL	12-16 ft-lbs	16.3-21.7 Nm

NOTE

The turn signal wires enter the switch housings through a relief grommet in the housing. Support turn signals throughout this procedure to prevent pulling the grommet or the turn sign wires out of the housing.

1. Repair or replace switches, turn signal switches, wires and grommets as necessary.

NOTE

For handlebar switch repair procedures, see 7.33 HANDLEBAR CONTROL MODULES.

2. Wrap wire ends and open ends of conduit with electrical tape.
3. Cut a length of mechanics wire to use as a leader.
4. Lay mechanics wire along the wire harnesses so a few inches overlap. Secure using electrical tape.
5. Lubricate parts with glass cleaner or isopropyl alcohol.
6. See Figure 2-130. Install the wire leaders through the handlebar grommets and to the center hole.
7. Pull wire bundles through to the handlebar center hole.
8. Loosely install left and right control module housings.
9. Pull slack from wire harnesses and remove the tape and mechanics wire.
10. See Figure 2-129. Place handlebar (3) on handlebar risers (4). Install upper handlebar clamp (2). Install but do not tighten upper clamp fasteners (1).
11. Connect left and right side control connectors [22, 24].

12. Connect turn signal connector [31].

NOTE

When clutch control is installed on handlebars, route cable in front of the handlebars.

13. Install clutch control and front master cylinder. Align housings and tighten fasteners. See 2.24 CLUTCH CONTROL and 2.10 FRONT BRAKE MASTER CYLINDER.
14. Using knurled areas of handlebar as a guide, center handlebars between handlebar risers.
15. Snug handlebar clamp fasteners.

NOTE

When adjusted according to this procedure, the handlebar height above seat does not exceed 15 in (38.1 cm). Handlebar adjustment must adhere to local regulations.

16. Without raising vehicle height, level vehicle by using lift or other suitable method.
17. See Figure 2-132. Place a piece of tape (1) on hand grip.
18. Mark center of hand grip (2).
19. Measure center of hand grips to floor to verify that handlebars are level.
20. If measurements are the same, adjust hand grips to a maximum of 42 in (106 cm).
21. If measurements are not the same, add both sides and divide by two to get handlebar height average. Adjust handlebar grips to a maximum of 42 in (106 cm).
22. See Figure 2-129. Tighten upper handlebar clamp:
    a. Verify gaps between upper clamp and lower risers are equal front and rear.
    b. See Figure 2-131. Tighten front and rear clamp fasteners in sequence shown to 12-16 ft-lbs (16.3-21.7 Nm).
23. Install main fuse.
24. Test front brake lever for pressure and operation.
25. Test throttle for correct operation. Adjust as required. See 1.12 THROTTLE CABLES.

⚠WARNING

Be sure that all lights and switches operate properly before operating motorcycle. Low visibility of rider can result in death or serious injury. (00316a)

26. Turn ignition switch ON. Test switches for proper operation.
27. Operate brake lever to test stop lamp.

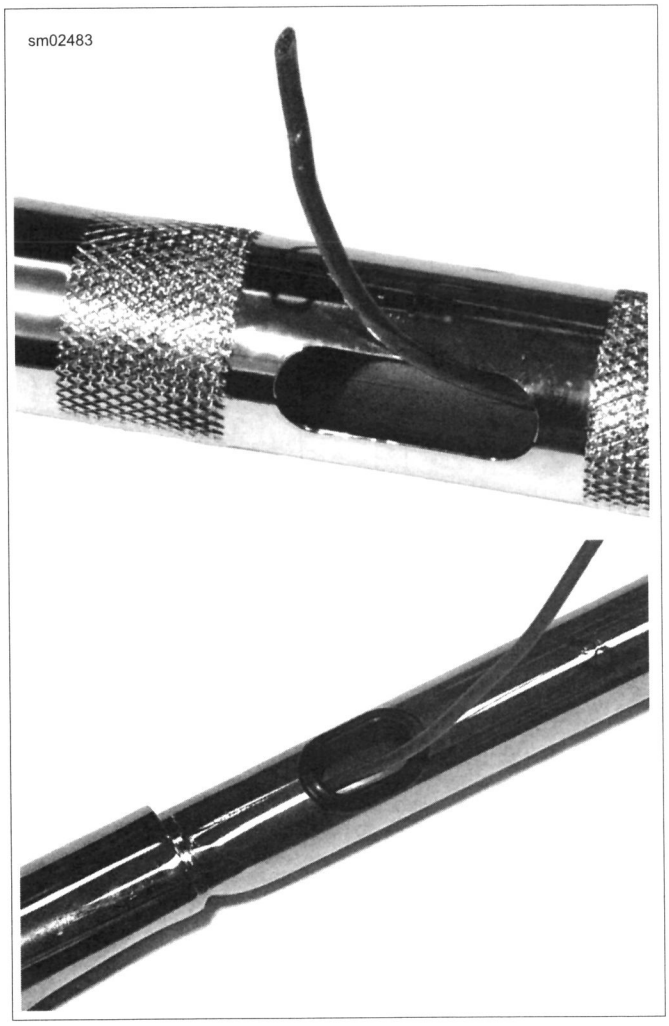

Figure 2-130. Wire Leader in Handlebar (Handlebar Removed from Motorcycle): Typical

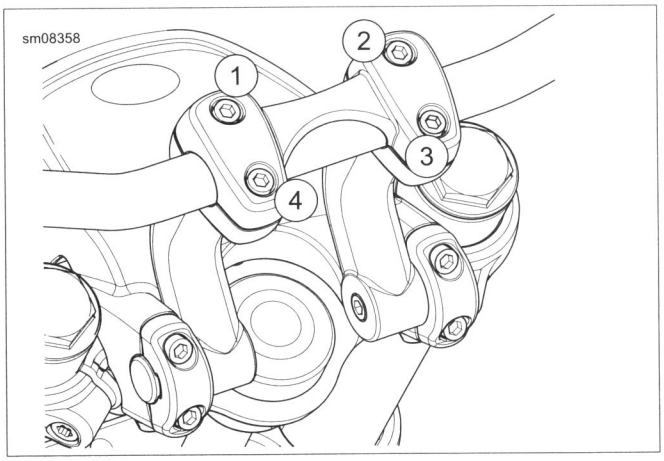

Figure 2-131. Handlebar Torque Sequence: FXDL

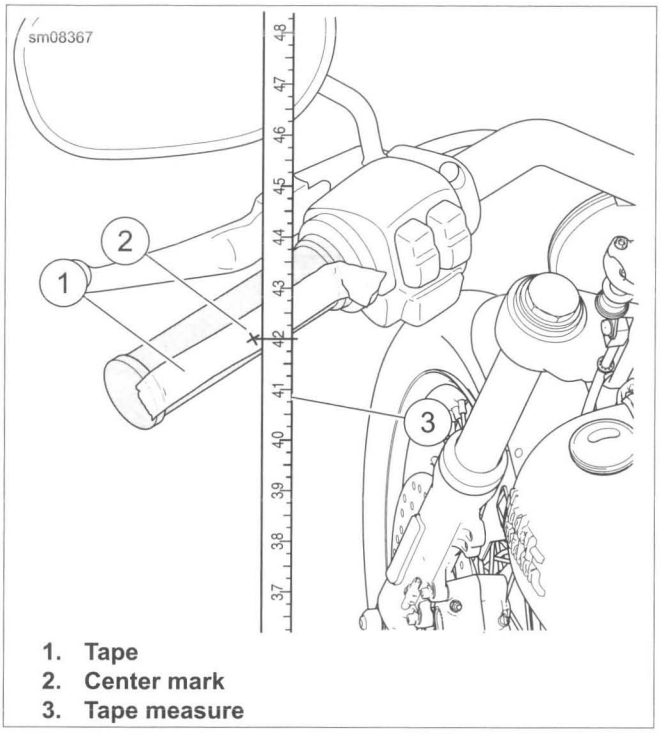

1. **Tape**
2. **Center mark**
3. **Tape measure**

Figure 2-132. Handlebar Height Measurement: FXDL

HANDLEBAR AND RISER ADJUSTMENT

FASTENER	TORQUE VALUE	
Handlebar riser clamp screws	12-16 ft-lbs	16.3-21.7 Nm

1. Cover painted parts to protect finish.
2. See Figure 2-133. Loosen four handlebar riser clamp screws (1).
3. Rotate risers (3) to desired position.

NOTE

Maintain equal gap between upper and lower half of clamps (2).

4. See Figure 2-134. Tighten screws in sequence shown to 12-16 ft-lbs (16.3-21.7 Nm).
5. Adjust handlebars. See 2.27 HANDLEBAR: FXDL, Installation.

NOTICE

Control wiring is routed inside handlebar and may be pinched or cut if controls are rotated too far. Electrical damage to control wiring can result. (00571b)

6. Adjust hand levers. See steps under 7.34 LEFT HANDLEBAR CONTROL MODULE, Installation and 7.35 RIGHT HANDLEBAR CONTROL MODULE, Installation.
7. Adjust turn signals and mirrors. See steps under 7.14 TURN SIGNALS, Front Lamp Housing Replacement: All But FLD
8. Turn handlebars to left lock and right lock. Check clearance.

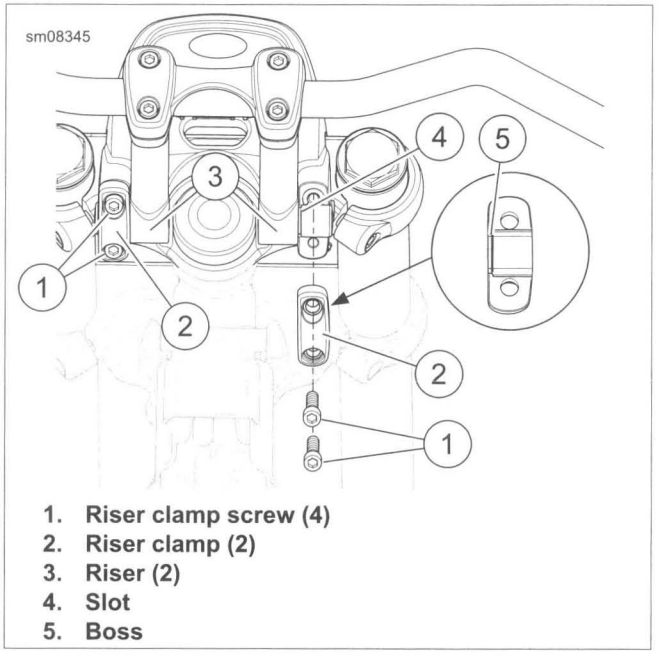

1. **Riser clamp screw (4)**
2. **Riser clamp (2)**
3. **Riser (2)**
4. **Slot**
5. **Boss**

Figure 2-133. Riser Assembly

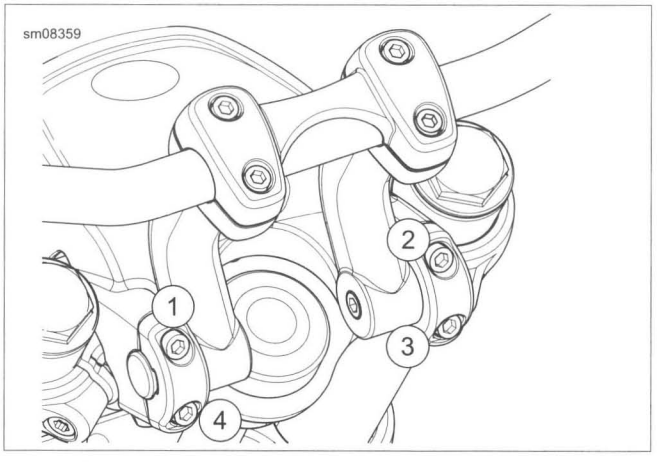

Figure 2-134. Riser Torque Sequence: FXDL

REMOVAL

1. See Figure 2-135 or Figure 2-136. Remove both screws (3) and nuts (2) on each side.
2. Carefully remove fender without scratching painted surfaces.

INSTALLATION

FASTENER	TORQUE VALUE	
Front fender nuts: all	15-21 ft-lbs	20.3-28.5 Nm

1. See Figure 2-135 or Figure 2-136. Carefully position fender and align mounting holes.
2. Verify that the fender mounting brackets are resting against the machined bosses of the forks.
3. Install screws (3) through fender mounting holes in fork legs.
4. Install nuts (2) onto screws. Tighten to 15-21 ft-lbs (20.3-28.5 Nm).

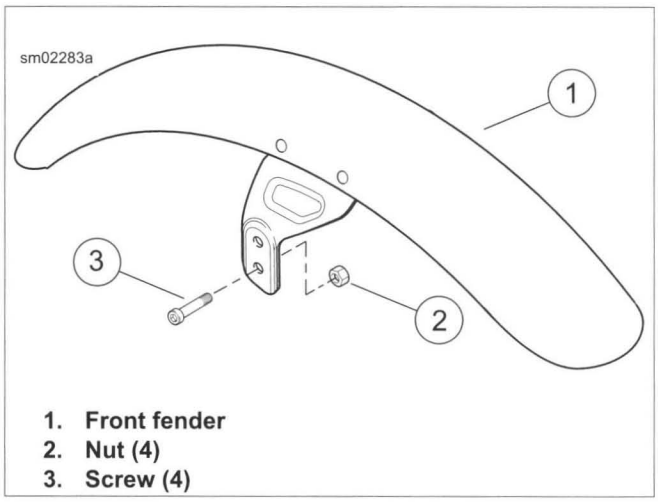

1. **Front fender**
2. **Nut (4)**
3. **Screw (4)**

Figure 2-135. Front Fender: All But FLD

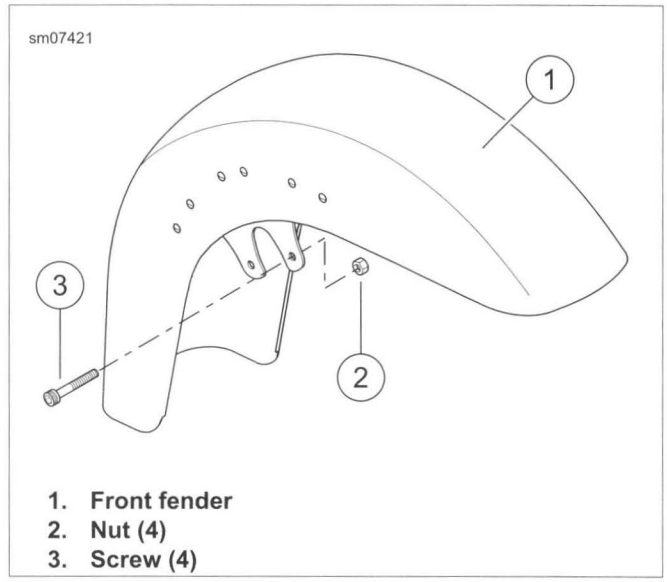

1. **Front fender**
2. **Nut (4)**
3. **Screw (4)**

Figure 2-136. Front Fender: FLD

GENERAL

This topic is split by vehicle type. However, the following steps are common to all models.

Removal

1. Remove seat.

⚠WARNING

To prevent accidental vehicle start-up, which could cause death or serious injury, disconnect negative (-) battery cable before proceeding. (00048a)

2. Disconnect negative battery cable.
3. Detach rear electrical harness.
   a. Follow the tail lamp and rear turn signal wire harness to the connector under the seat.
   b. Separate the connector.
   c. If necessary, remove the wires and the attached socket terminals from the connector. See the electrical diagnostic manual and A.2 WIRING DIAGRAMS.
4. Cut cable strap securing harness to frame. Pull harness through fender opening.
5. Continue with the removal steps for your specific vehicle.

Tail Lamp/Turn Signal Harness Routing

NOTES

- *Conduit is not used to route wiring on FXDB, FXDBC, FXDBP and FXDF models. Wires are run between fender supports and fender through wire channel.*
- *Conduit replacement may require adhesive removal.* ***Do NOT use solvents or harsh chemicals to remove adhesive as damage to painted surfaces may occur.***

1. Thoroughly clean inside surface of fender with soap and water until it is free of dirt, oil, or other debris.

NOTE

For typical wiring harness/conduit placement, see Figure 2-138.

2. Dry the surface, then wipe the area where conduit will be placed with isopropyl alcohol. Allow to dry completely.
3. Slide tail lamp wiring harness through conduit and plug connectors into appropriate sockets. See the electrical diagnostic manual and A.2 WIRING DIAGRAMS.
4. See Figure 2-137. Remove protective strip covering adhesive on conduit and lightly position the conduit in place.

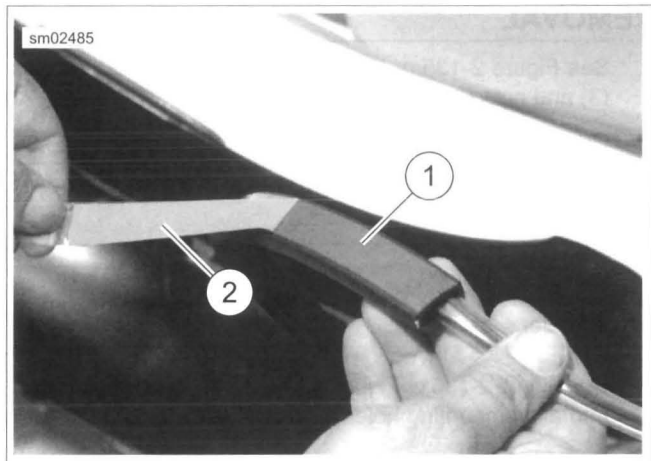

1. **Conduit**
2. **Protective strip**

Figure 2-137. Removing Protective Strip from Conduit

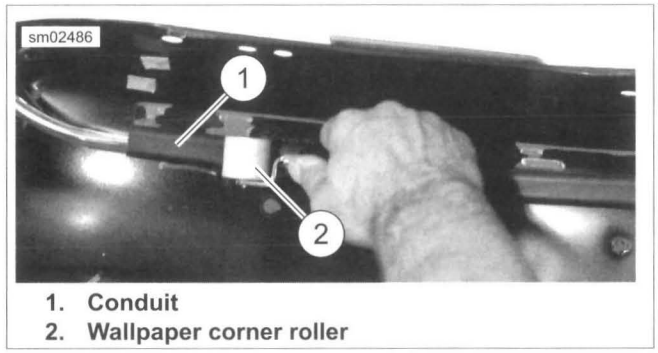

1. **Conduit**
2. **Wallpaper corner roller**

Figure 2-138. Purging Air Between Adhesive and Fender

5. See Figure 2-138. Using a wallpaper corner roller (available at most home improvement stores), roll along conduit to purge the air from between the adhesive and the fender.

NOTES

- *Do NOT rub the conduit to make it adhere to the fender. This method does not do an adequate job of purging the air from between the adhesive and fender.*
- *Once the adhesive is in place, full cure time is 72 hours. Do NOT pull or try to reposition the conduit during this period.*

6. Continue with the installation steps for your specific vehicle.

Installation

After attaching fender, perform the following steps on all models.

1. Route harness through opening in fender.
2. Install socket terminals back into connector. See the electrical diagnostic manual and A.2 WIRING DIAGRAMS.
3. Connect negative battery cable.

⚠WARNING

After installing seat, pull upward on seat to be sure it is locked in position. While riding, a loose seat can shift causing loss of control, which could result in death or serious injury. (00070b)

4. Install seat.

⚠WARNING

Be sure that all lights and switches operate properly before operating motorcycle. Low visibility of rider can result in death or serious injury. (00316a)

5. Test lights for proper operation.

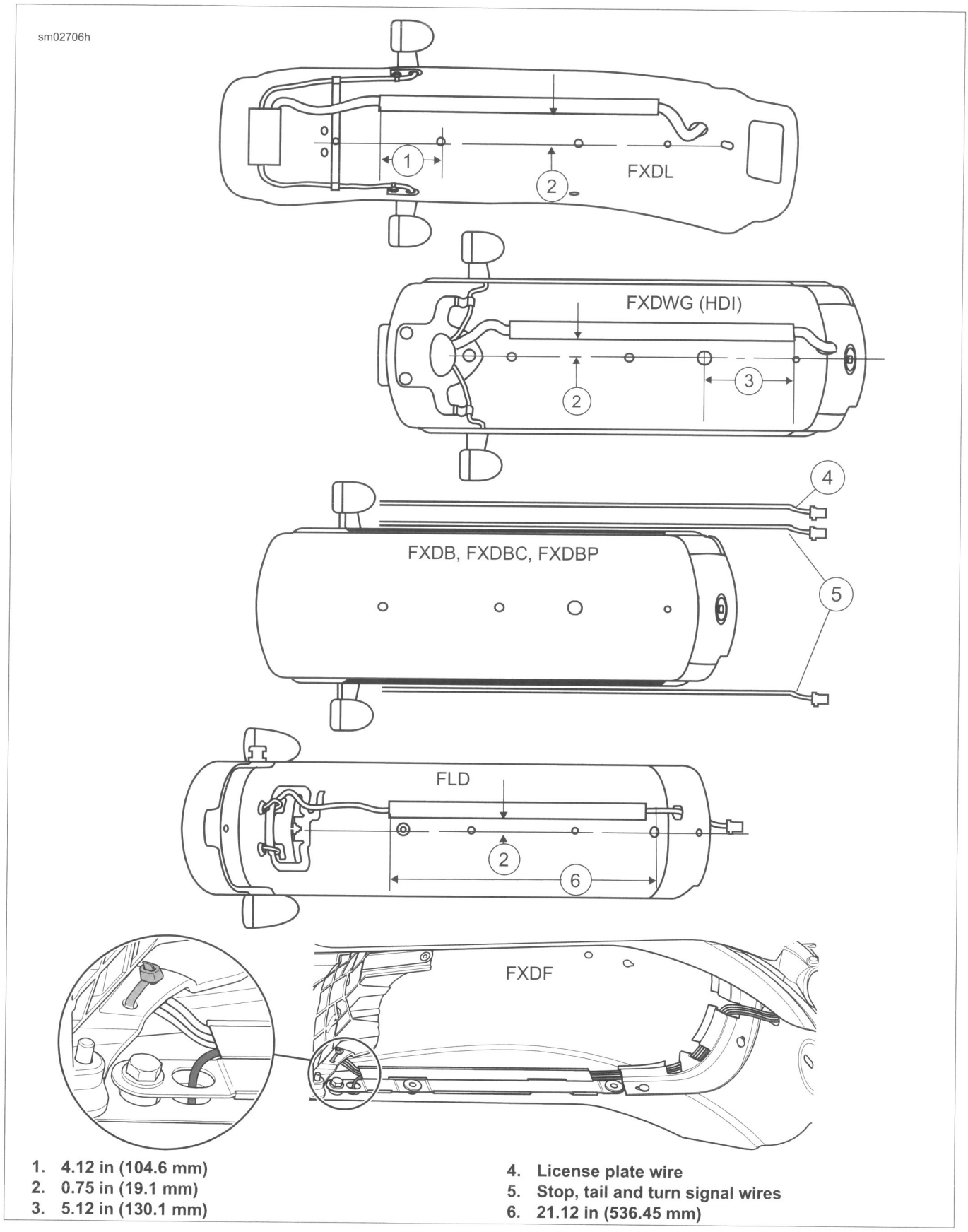

1. 4.12 in (104.6 mm)
2. 0.75 in (19.1 mm)
3. 5.12 in (130.1 mm)
4. License plate wire
5. Stop, tail and turn signal wires
6. 21.12 in (536.45 mm)

Figure 2-139. Rear Fender Harness Routing-Viewed from Underneath

FXDL

FASTENER	TORQUE VALUE	
Rear fender screw: FXDL	12-18 ft-lbs	16.3-24.4 Nm

Removal

1. Remove rear turn signal lamps. See 7.14 TURN SIGNALS.
2. See Figure 2-140. Remove screws (1) and spacers (6) that hold fender in place and carefully remove fender and covers (3).

Installation

1. Before installing fender, install tail lamp/turn signal harness and conduit to underside of fender. See Tail Lamp/Turn Signal Harness Routing instructions under 2.29 REAR FENDER, General.
2. See Figure 2-140. Apply LOCTITE 243 MEDIUM STRENGTH THREADLOCKER AND SEALANT (blue) to the threads of screws (1). Place fender and covers (3) into position. Place spacers (6) into position and tighten screws (1) to 12-18 ft-lbs (16.3-24.4 Nm).
3. Install rear turn signals. See 7.14 TURN SIGNALS.
4. Finish with installation instructions under 2.29 REAR FENDER, General.

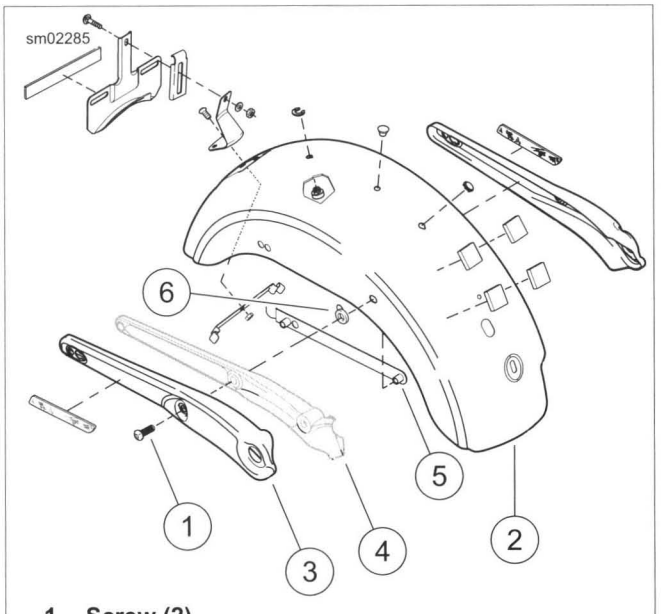

1. **Screw (2)**
2. **Fender**
3. **Covers (2)**
4. **Fender support**
5. **Mounting bracket (inside fender)**
6. **Spacer (2)**

Figure 2-140. Rear Fender: FXDL

FXDB, FXDBC, FXDBP

FASTENER	TORQUE VALUE	
Rear fender screw: FXDB, FXDBC, FXDBP	12-18 ft-lbs	16.3-24.4 Nm

Removal

1. Remove rear turn signal lamps. See 7.14 TURN SIGNALS.
2. See Figure 2-141. Remove screws (1, 11) and spacers (9) that hold fender in place and carefully remove fender from supports.

Installation

1. Before installing fender, install tail lamp/turn signal harness and conduit to underside of fender. See Tail Lamp/Turn Signal Harness Routing instructions under 2.29 REAR FENDER, General.
2. See Figure 2-141. Apply LOCTITE 243 MEDIUM STRENGTH THREADLOCKER AND SEALANT (blue) to the threads of bolts (1) and screws (11).
3. Place fender and mounting bracket (3) into position.
4. Place spacers (9) into position and tighten screws (11, 1) to 12-18 ft-lbs (16.3-24.4 Nm).
5. Install rear turn signals. See 7.14 TURN SIGNALS.
6. Finish with installation instructions under 2.29 REAR FENDER, General.

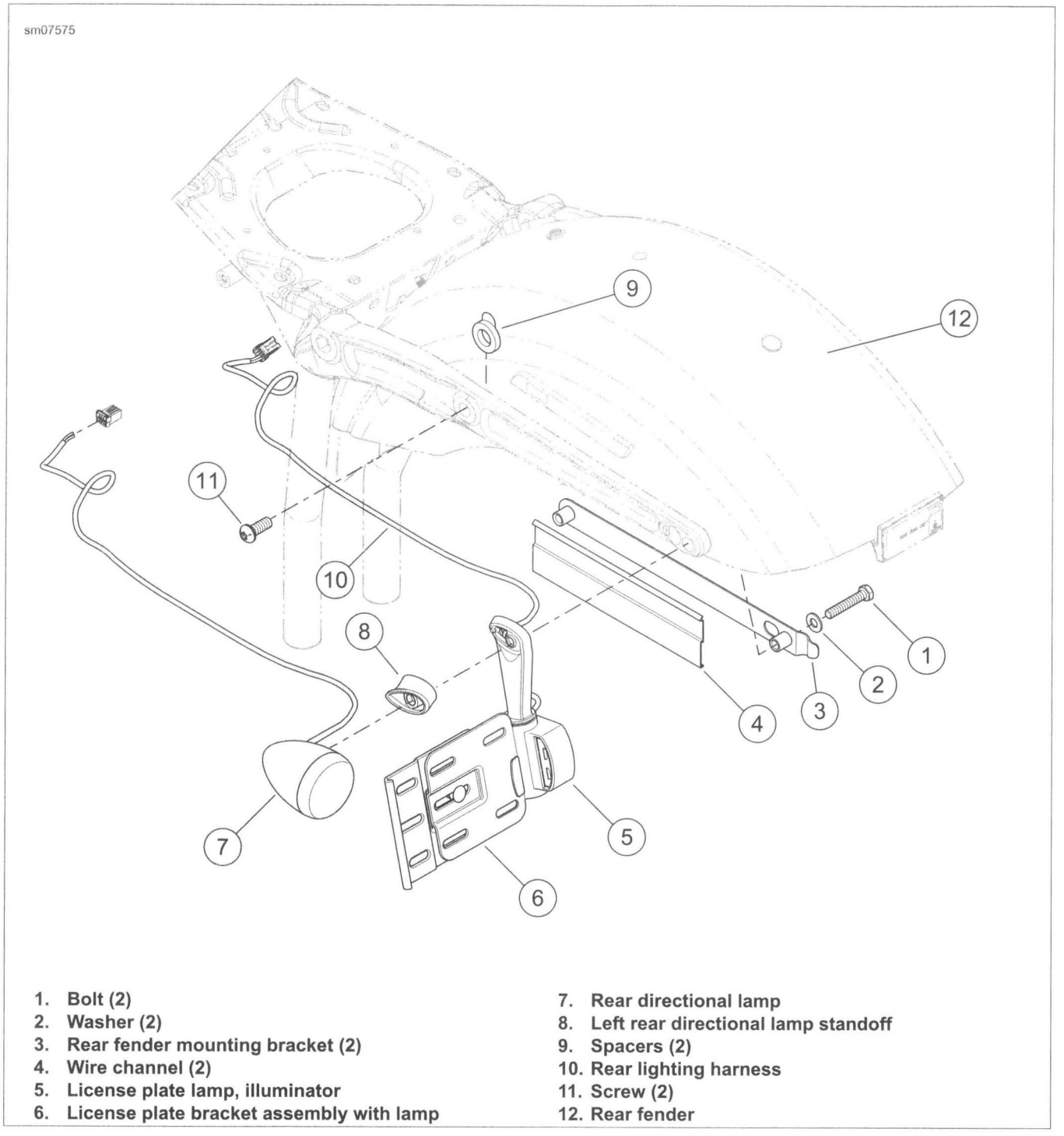

1. **Bolt (2)**
2. **Washer (2)**
3. **Rear fender mounting bracket (2)**
4. **Wire channel (2)**
5. **License plate lamp, illuminator**
6. **License plate bracket assembly with lamp**
7. **Rear directional lamp**
8. **Left rear directional lamp standoff**
9. **Spacers (2)**
10. **Rear lighting harness**
11. **Screw (2)**
12. **Rear fender**

Figure 2-141. FXDB Rear Fender with Side Mount License Bracket and Lamp (Domestic and California)

FXDWG

FASTENER	TORQUE VALUE	
Rear fender screw: FXDWG	12-18 ft-lbs	16.3-24.4 Nm
Side mount license plate bracket screws: FXDWG	84-180 **in-lbs**	9.5-20.3 Nm
Rear mount license plate bracket screws: FXDWG	30-40 **in-lbs**	3.4-4.5 Nm

Removal

1. Remove rear turn signal lamps. See 7.14 TURN SIGNALS.
2. To ease installation, remove rear shock absorber lower bolts. See 2.22 REAR SHOCK ABSORBERS.
3. See Figure 2-142. Remove screws (1) and spacers (6) that hold fender in place and carefully remove fender from fender supports (4).

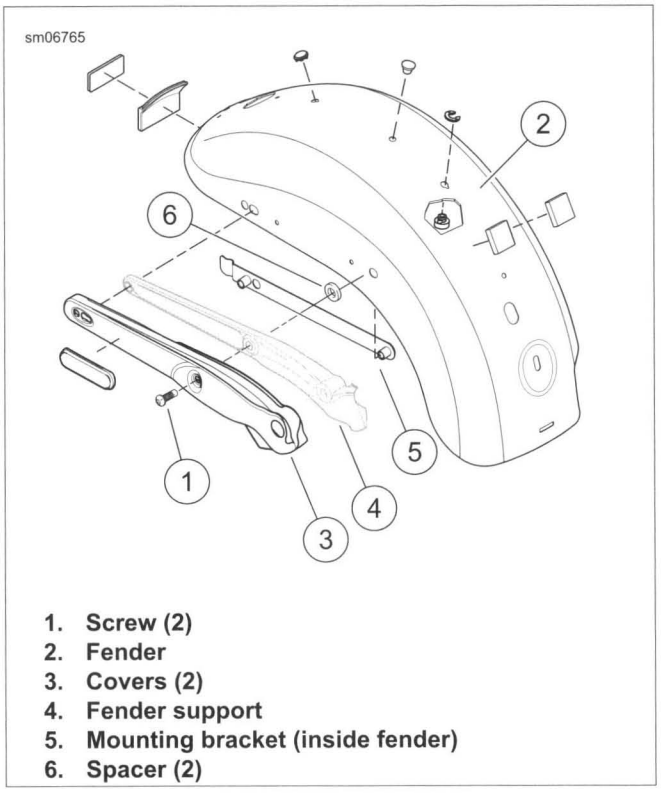

1. **Screw (2)**
2. **Fender**
3. **Covers (2)**
4. **Fender support**
5. **Mounting bracket (inside fender)**
6. **Spacer (2)**

Figure 2-142. Rear Fender: FXDWG

Sissy Bar

NOTE

Using clean cardboard strips helps prevent scratches to the fender when removing and installing the sissy bar.

1. See Figure 2-143. Install clean cardboard (1) between the fender and sissy bar on each side.
2. Remove push-in fasteners (2) that secure the sissy bar to the fender.
3. Carefully raise the sissy bar up away from the fender, making sure that the cardboard stays between the fender and sissy bar until it's removed.
4. Install sissy bar onto fender using cardboard (1) and secure to fender with **new** push-in fasteners.

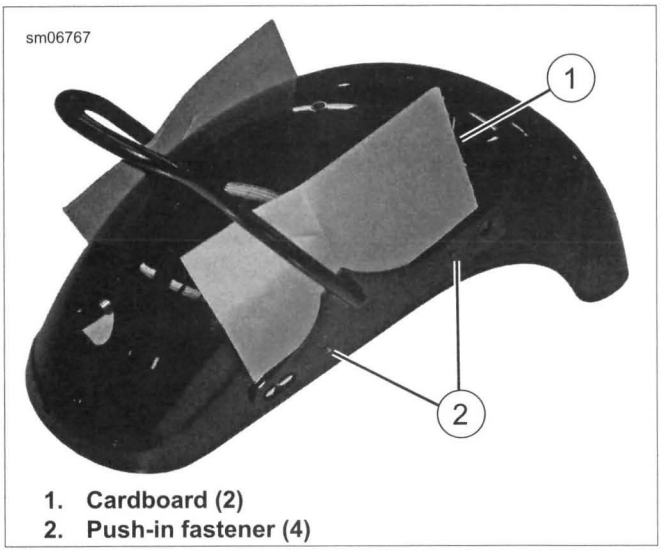

1. **Cardboard (2)**
2. **Push-in fastener (4)**

Figure 2-143. Sissy Bar

Installation

1. **FXDWG HDI models:** Install tail lamp/turn signal harness conduit, if removed, to underside of fender. See Tail Lamp/Turn Signal Harness Routing instructions under 2.29 REAR FENDER, General.
2. See Figure 2-142. Apply LOCTITE 243 MEDIUM STRENGTH THREADLOCKER AND SEALANT (blue) to the threads of screws (1). Place fender (2), covers (3), mounting bracket (5) and spacers (6) into position. Tighten screws (1) to 12-18 ft-lbs (16.3-24.4 Nm).
3. Install rear turn signals. See 7.14 TURN SIGNALS.
4. Make sure that wires are properly routed on inner side of fender and that no wires will come in contact with rear wheel.
   a. **FXDWG HDI models:** wires should be routed through wire conduit.
   b. **FXDWG U.S. models:** wires are routed along channels on both sides of fender and through a wire channel on front of fender.
5. If license plate bracket was removed, install bracket and tighten fasteners to:
   a. Side mount license plate bracket screws: 84-180 **in-lbs** (9.5-20.3 Nm).
   b. Rear mount license plate bracket screws: 30-40 **in-lbs** (3.4-4.5 Nm).
6. Install rear shock absorber lower bolts. See 2.22 REAR SHOCK ABSORBERS.
7. Finish with installation instructions under 2.29 REAR FENDER, General.

FLD

FASTENER	TORQUE VALUE	
Seat strap nut: FLD	60-90 **in-lbs**	6.8-10.2 Nm
Saddlebag lower mount spool: FLD	15-20 ft-lbs	20.3-27.1 Nm
Rear fender screw: FLD	30-37 ft-lbs	40.7-50.2 Nm

Removal

1. Remove seat.

⚠WARNING

To prevent accidental vehicle start-up, which could cause death or serious injury, remove main fuse before proceeding. (00251b)

2. Remove main fuse.
3. Remove saddlebags.

NOTE

See Figure 2-139. To verify proper installation, make note of fender wire routing and hardware locations before removal.

4. Locate rear lighting wiring harness connector [7] under seat and disconnect.

NOTE

See Figure 2-144. If disassembling fender, loosen screws (4) before removing screws (1).

5. Remove screws (1) along with spools (2, 13). Remove rear fender assembly.

Disassembly

1. Remove rear lighting. See 7.13 TAIL LAMP and 7.14 TURN SIGNALS, Rear Turn Signal Lamps and Bracket: FLD.
2. See Figure 2-144. Remove inner brackets (6).
3. Push push-in fasteners (9) in. Remove outer spacers (10).
4. Remove screws (4), spools (5) and doubler bracket (11).
5. Remove retention washer (8) and nut (7).
6. Remove harness and conduit if necessary. See 2.29 REAR FENDER, General.
7. Remove seat strap.

Assembly

1. Install seat strap. Tighten to 60-90 **in-lbs** (6.8-10.2 Nm).
2. Install harness and **new** conduit, if removed. See 2.29 REAR FENDER, General.
3. See Figure 2-144. Install nut (7) and retention washer (8).
4. Install doubler bracket (11) and spools (5). Apply LOCTITE 243 MEDIUM STRENGTH THREADLOCKER AND SEALANT (blue) to screws (4). Tighten to 15-20 ft-lbs (20.3-27.1 Nm).
5. Install outer spacers (10) and engage push-in fasteners (9) to hold spacer in place.
6. Hold inner brackets (6) in place. Install rear lighting. See 7.13 TAIL LAMP and 7.14 TURN SIGNALS, Rear Turn Signal Lamps and Bracket: FLD.

Installation

1. See Figure 2-144. Apply LOCTITE 243 MEDIUM STRENGTH THREADLOCKER AND SEALANT (blue) to threads of screws (1).

NOTE

Spacers (12) are adhered to outer spacers (10). Verify that they are in place when installing fender.

2. Secure fender with screws (1). Tighten to 30-37 ft-lbs (40.7-50.2 Nm).
3. Mate rear lighting connector [7].

⚠WARNING

After installing seat, pull upward on seat to be sure it is locked in position. While riding, a loose seat can shift causing loss of control, which could result in death or serious injury. (00070b)

4. Install seat.
5. Install main fuse.
6. Install saddlebags.

⚠WARNING

Be sure that all lights and switches operate properly before operating motorcycle. Low visibility of rider can result in death or serious injury. (00316a)

7. Verify lighting operation.

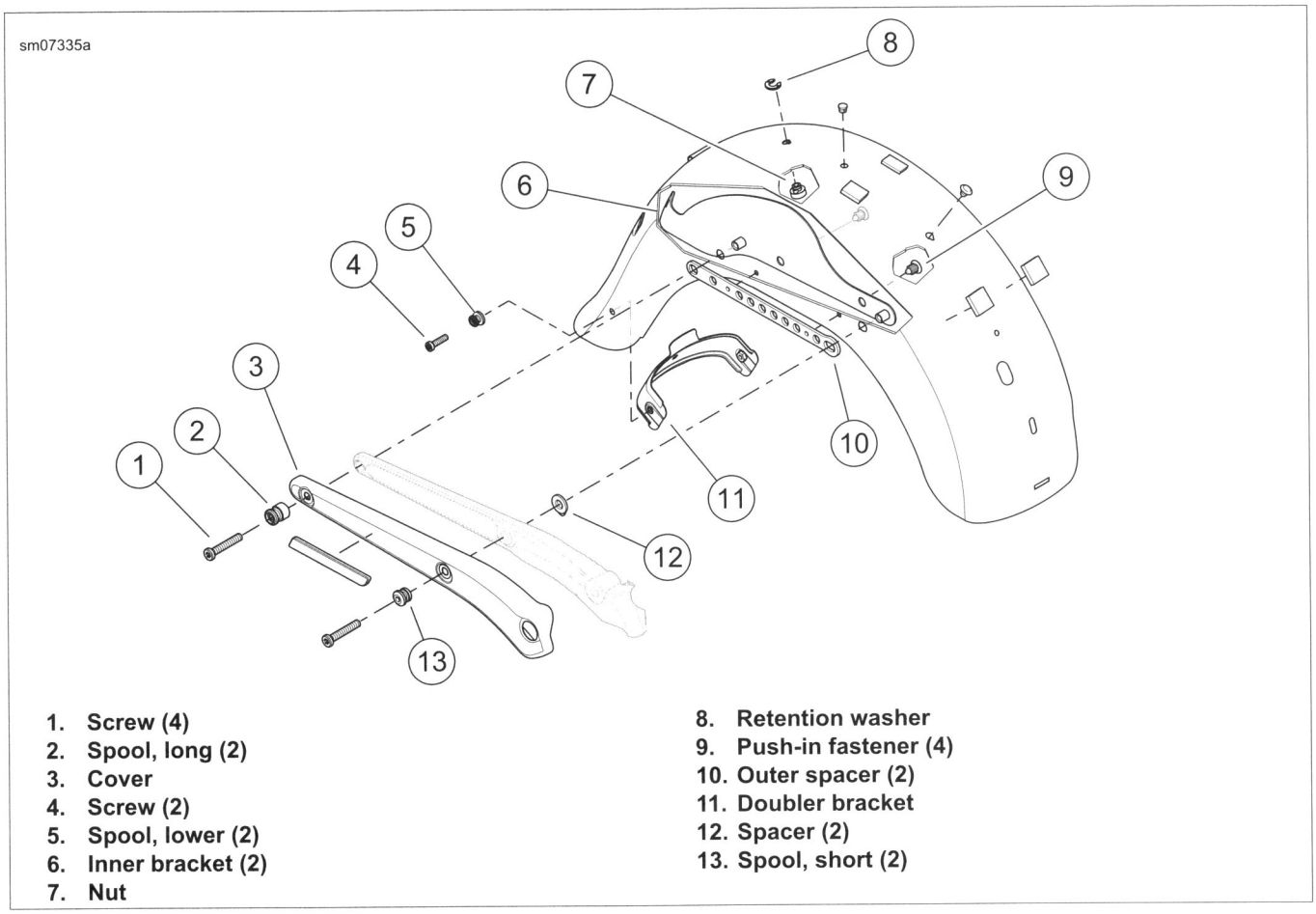

1. **Screw (4)**
2. **Spool, long (2)**
3. **Cover**
4. **Screw (2)**
5. **Spool, lower (2)**
6. **Inner bracket (2)**
7. **Nut**
8. **Retention washer**
9. **Push-in fastener (4)**
10. **Outer spacer (2)**
11. **Doubler bracket**
12. **Spacer (2)**
13. **Spool, short (2)**

Figure 2-144. Rear Fender: FLD

FXDF

FASTENER	TORQUE VALUE	
Rear fender screw: FXDF	12-18 ft-lbs	16.3-24.4 Nm

Removal

1. Remove rear turn signal lamps. See 7.14 TURN SIGNALS.

NOTE

See Figure 2-145. Note wire routing and orientation of wire channel (4) before removal.

2. See Figure 2-145. Remove wiring from wire channels.
3. Remove screws (1).
4. Remove covers (2), wire channels (4) and fender mounting brackets (5).
5. Remove fender (8).

Installation

NOTE

See Figure 2-145. Conduit is not used to route wiring on FXDF models. Wire is routed on both sides of fender through wire channels (4) and wire guide (6).

1. See Figure 2-145. Install wire channels (4) on fender mounting brackets (5).
2. Place fender (8) and fender mounting brackets into position.
3. Install spacers (12) over fender mounting brackets.
4. Apply LOCTITE 243 MEDIUM STRENGTH THREADLOCKER AND SEALANT (blue) to the threads of screws (1). Place covers (2) over fender supports (3). Tighten screws to 12-18 ft-lbs (16.3-24.4 Nm).
5. Install rear turn signals. See 7.14 TURN SIGNALS.
6. Remove lower shock absorber mounting screws. See 2.22 REAR SHOCK ABSORBERS. Lower wheel to allow for adequate space for wire routing.
7. Route tail lamp, license plate lamp and turn signal wiring through wire channels and wire guide.
8. Install lower shock absorber mounting screws. See 2.22 REAR SHOCK ABSORBERS.
9. Finish with installation instructions under 2.29 REAR FENDER, General.

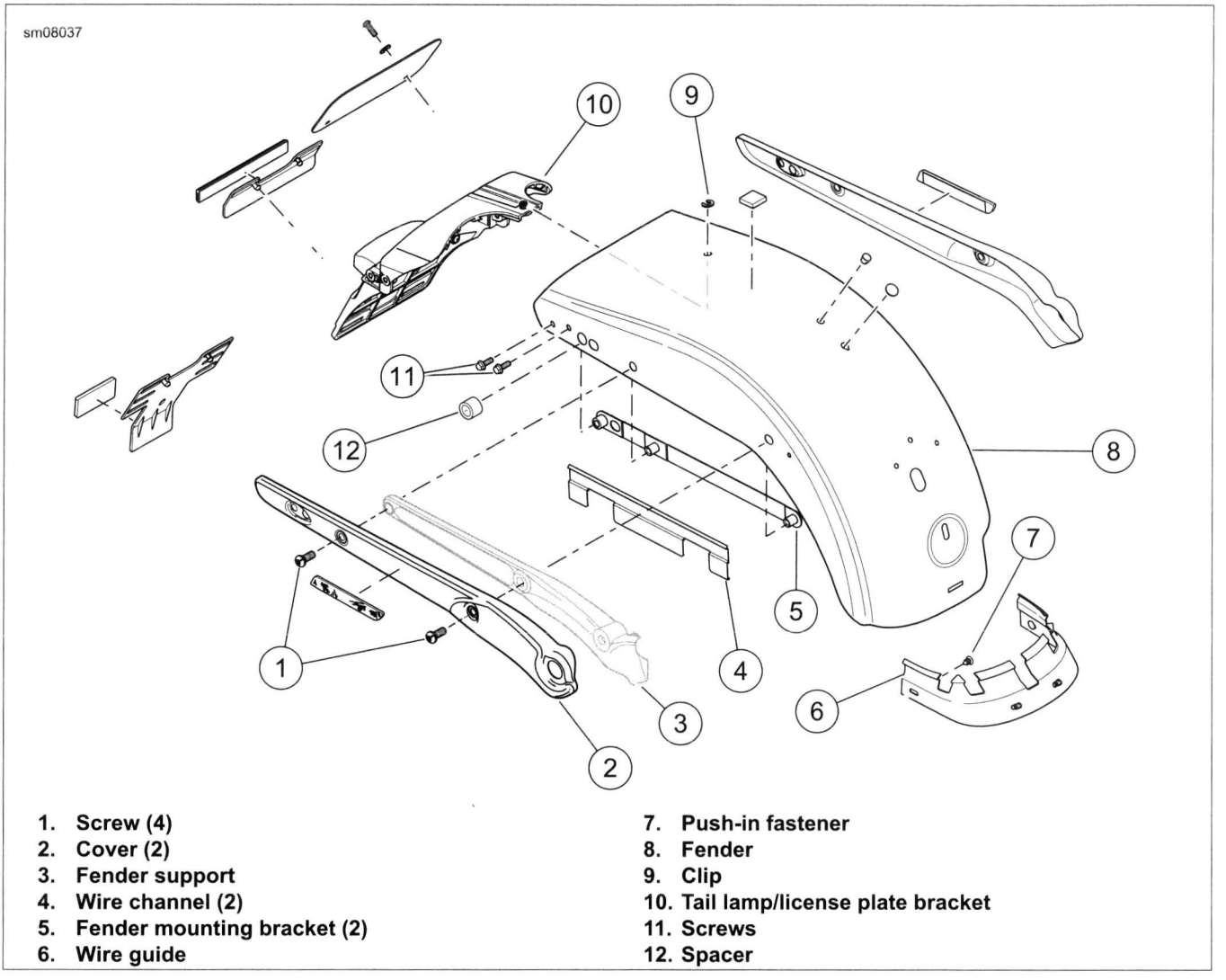

1. Screw (4)
2. Cover (2)
3. Fender support
4. Wire channel (2)
5. Fender mounting bracket (2)
6. Wire guide
7. Push-in fastener
8. Fender
9. Clip
10. Tail lamp/license plate bracket
11. Screws
12. Spacer

Figure 2-145. Rear Fender (FXDF)

REMOVAL

Seat and Seat Strap: All But FXDWG

NOTES

- *See Figure 2-146. There is a nylon retaining clip between the rear seat bracket and the fender. DO NOT lose this clip, substitute a clip of different material or install the seat without this clip. Any of these actions results in scratched fender paint. The nylon retaining clip secures the seat screw nut.*
- *There is a bracket at the front of the seat that slips under a U-shaped frame bracket.*
- *There is no need to remove the seat bracket from the seat pan.*

1. See Figure 2-146. Remove screw (1) from bracket (2). Nylon clip remains with fender assembly.
2. Slide seat to the rear and lift seat.
3. If equipped with seat strap, remove nut (16) and washer (15) and seat strap (11).

Seat and Seat Strap: FXDWG

NOTES

- *The front of the seat pillion is secured to a shoulder bolt located under the pillion.*
- *There is a bracket at the front of the seat that slips under a U-shaped frame bracket.*
- *There is no need to remove the seat bracket from the seat pan.*
- *See Figure 2-146. The seat strap (3) is secured to the fender by a shoulder bolt (6) and shoulder washer (7).*
- *Note the orientation of the shoulder washer (7) for installation.*

1. Remove screw (1) from pillion (8). Nylon clip remains with fender assembly.
2. Slide the passenger pillion forward slightly and lift away from the shoulder bolt.
3. Remove shoulder bolt (6), shoulder washer (7), and seat strap (3).
4. Lift rear of seat and slide seat to the rear.

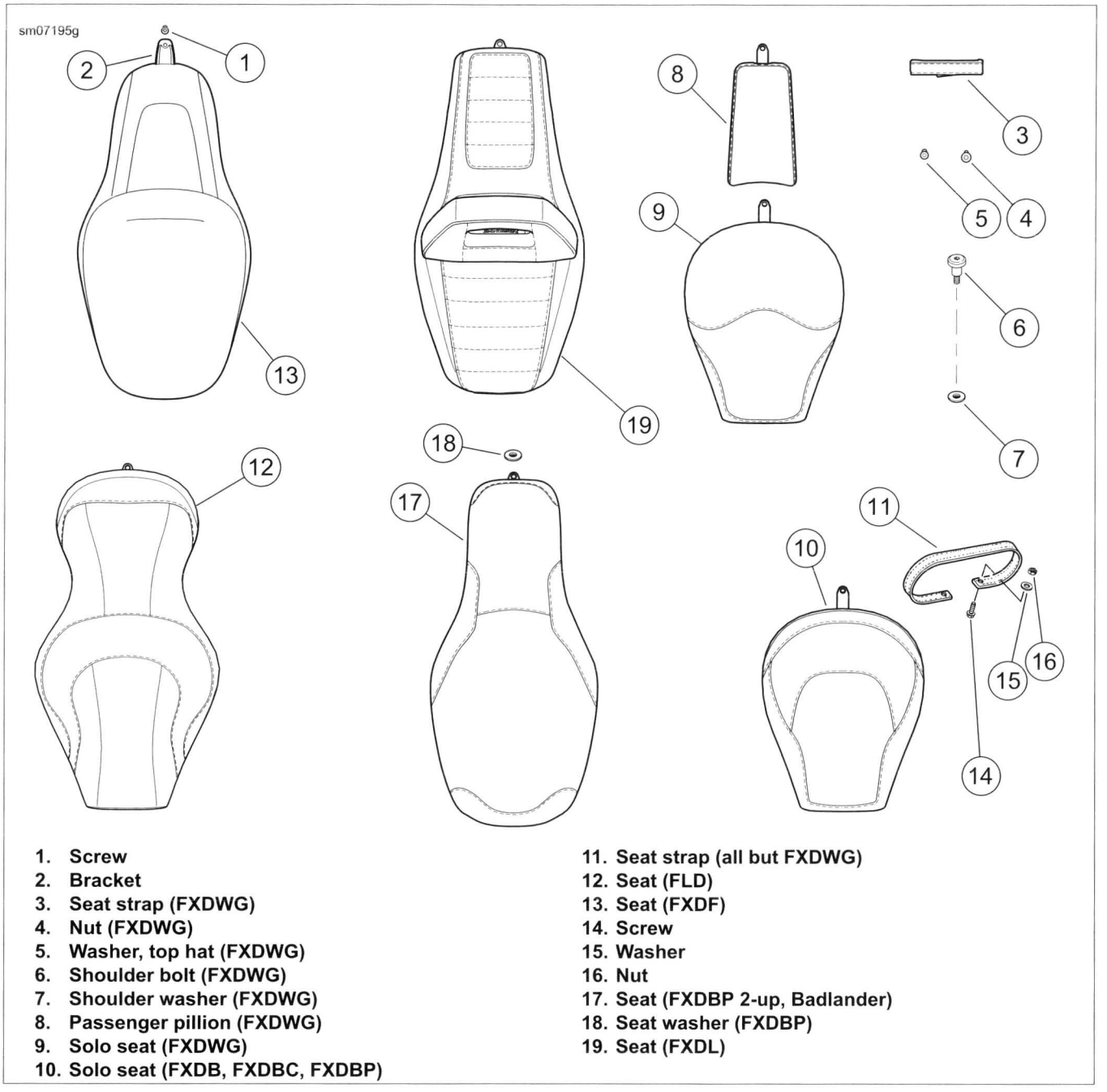

1. **Screw**
2. **Bracket**
3. **Seat strap (FXDWG)**
4. **Nut (FXDWG)**
5. **Washer, top hat (FXDWG)**
6. **Shoulder bolt (FXDWG)**
7. **Shoulder washer (FXDWG)**
8. **Passenger pillion (FXDWG)**
9. **Solo seat (FXDWG)**
10. **Solo seat (FXDB, FXDBC, FXDBP)**
11. **Seat strap (all but FXDWG)**
12. **Seat (FLD)**
13. **Seat (FXDF)**
14. **Screw**
15. **Washer**
16. **Nut**
17. **Seat (FXDBP 2-up, Badlander)**
18. **Seat washer (FXDBP)**
19. **Seat (FXDL)**

Figure 2-146. Seat

INSTALLATION

FASTENER	TORQUE VALUE	
Seat rear fastener: all	20-40 **in-lbs**	2.3-4.5 Nm
Seat strap nut: FXDWG	60-90 **in-lbs**	6.8-10.2 Nm
Seat shoulder bolt: FXDWG	80-90 **in-lbs**	9.0-10.2 Nm
Seat rear fastener: all	20-40 **in-lbs**	2.3-4.5 Nm

Seat and Seat Strap: All But FXDWG

1. **FXDBP model:** See Figure 2-146. Place washer (15) between fender and the seat with small diameter facing up.
2. Slide back of seat through seat strap loop.
3. Slide seat bracket, located under front of seat, into the U-shaped frame bracket.

⚠WARNING

After installing seat, pull upward on seat to be sure it is locked in position. While riding, a loose seat can shift causing loss of control, which could result in death or serious injury. (00070b)

4. Verify that nylon retaining clip is in position on fender. Install screw (1). Tighten to 20-40 **in-lbs** (2.3-4.5 Nm).

Seat and Seat Strap: FXDWG

1. **Seat strap:** See Figure 2-146. Install seat strap, if equipped. Tighten nut (4) to 60-90 **in-lbs** (6.8-10.2 Nm).

NOTE

When the shoulder washer (7) is installed properly, the shoulder fits into the hole in the seat bracket.

2. Install shoulder bolt (6).
   a. Insert shoulder bolt through both holes in seat strap.
   b. Place shoulder washer (7) onto shoulder bolt.
   c. Install shoulder bolt through the rear seat bracket and into the fender clip.
   d. Tighten shoulder bolt to 80-90 **in-lbs** (9.0-10.2 Nm).
3. Insert the pillion through the seat strap. Align the slot under the front of the pillion with the shoulder bolt.
4. Slide pillion backward until firmly secured by the shoulder bolt.

⚠WARNING

After installing seat, pull upward on seat to be sure it is locked in position. While riding, a loose seat can shift causing loss of control, which could result in death or serious injury. (00070b)

5. Verify that nylon retaining clip is in position on fender. Install screw (1). Tighten to 20-40 **in-lbs** (2.3-4.5 Nm).

LUMBAR PAD: FXDL

FASTENER	TORQUE VALUE	
Lumbar nameplate mounting screw: FXDL	48-60 **in-lbs**	5.4-6.8 Nm
Lumbar pad mounting screw: FXDL	48-60 **in-lbs**	5.4-6.8 Nm

Removal

NOTE

Loosely install lumbar pad screws into back of lumbar pad after removal.

1. See Figure 2-147. Remove seat (1).
2. Remove lumbar pad screws (6) and washers (5) from the lumbar pad (3).
3. Remove nameplate screws (2) from the nameplate (4).
4. Remove nameplate from lumbar pad.
5. Place nameplate on seat (1).
6. Install screws into nameplate. Tighten screws.

Installation

1. See Figure 2-147. Remove screws (2) from nameplate (4).
2. Place nameplate on lumbar pad (3).
3. Install screws in nameplate. Tighten to 48-60 **in-lbs** (5.4-6.8 Nm).
4. Insert lumbar pad on seat (1).
5. Install screws (6) and washers (5) to lumbar pad. Tighten to 48-60 **in-lbs** (5.4-6.8 Nm).
6. Install seat.

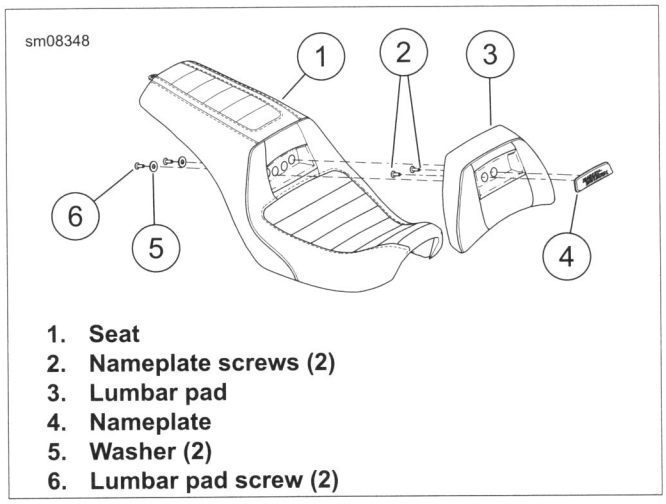

1. **Seat**
2. **Nameplate screws (2)**
3. **Lumbar pad**
4. **Nameplate**
5. **Washer (2)**
6. **Lumbar pad screw (2)**

Figure 2-147. Lumbar Pad: FXDL

RIDER FOOTBOARDS

FASTENER	TORQUE VALUE	
Rider footboard pivot bolt nut	60-80 **in-lbs**	6.8-9.0 Nm
Rider footboard bracket screws	32-37 ft-lbs	43-50 Nm
Shift rod fastener with acorn nut	96-144 **in-lbs**	10.8-16.2 Nm

Removal

NOTE

Both brake pedal and shifter levers are removed with the footboard brackets.

1. Disconnect brake rod from brake pedal.
2. Remove acorn nut and disconnect shift rod from shift lever.
3. See Figure 2-148. Remove footboard support mounting screws (6) from footboard supports.
4. Remove footboards and bracket assemblies.

Disassembly

NOTE

If only replacing the rubber pad, refer to step 1. Then see steps 3-4 under ASSEMBLY.

1. Tilt footboard upward. From bottom of footboard, use a large flat blade screwdriver to push the rubber anchors on pad up through holes in footboard.
2. See Figure 2-148. Remove flange locknuts (8) and shoulder bolts (7) from underside of footboard.
3. Remove footboard from brackets.

Assembly

1. Position footboard between brackets. Install shoulder bolts (7) so the flange locknuts (8) are on the inboard side.
2. Install flange locknuts onto shoulder bolts. Tighten to 60-80 **in-lbs** (6.8-9.0 Nm).
3. Moisten the rubber anchors on bottom of **new** pad with soapy water.
4. Position pad on footboard. From bottom of footboard, use pliers to pull rubber anchors through holes in footboard.

Installation

1. See Figure 2-148. Install footboard and bracket assembly using footboard support mounting screws (6).
2. Tighten screws to 32-37 ft-lbs (43-50 Nm).
3. Attach brake rod to brake pedal with a **new** pretzel clip for the cotter pin.
4. Attach shift levers to shift rod using acorn nut. Tighten to 96-144 **in-lbs** (10.8-16.2 Nm).

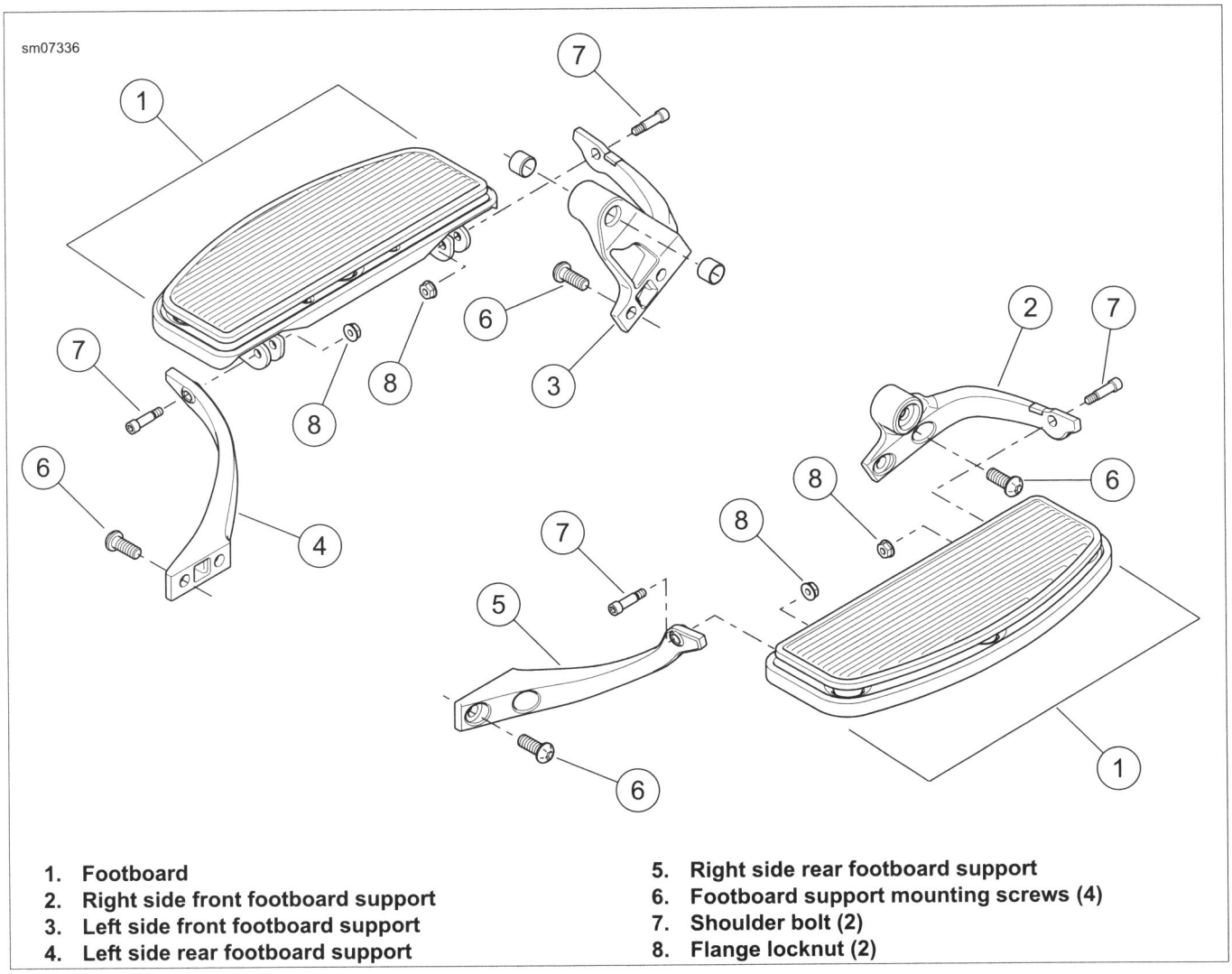

1. **Footboard**
2. **Right side front footboard support**
3. **Left side front footboard support**
4. **Left side rear footboard support**
5. **Right side rear footboard support**
6. **Footboard support mounting screws (4)**
7. **Shoulder bolt (2)**
8. **Flange locknut (2)**

Figure 2-148. Rider Footboards (Quantities shown are for each footboard)

RIDER FOOTRESTS: MID CONTROLS

FASTENER	TORQUE VALUE	
Footrest support mounting screws	30-40 ft-lbs	40.7-54.2 Nm
Footrest support mounting screws	30-40 ft-lbs	40.7-54.2 Nm
Footrest mounting screws and nuts	84-108 **in-lbs**	9.5-12.2 Nm

Removal

1. See Figure 2-149. Remove screw (2), nut and spring washer to remove rider footrests (1).
2. Remove mounting screws (5) and lockwashers (6) to remove left rider footrest support (3).
3. Remove clevis pin and circle cotter pin and disconnect brake rod from brake pedal.
4. Remove mounting screws (5) and lockwashers (6) to remove right rider footrest support (4) along with brake pedal.

Installation

1. See Figure 2-149. Install right rider footrest support (4) and brake pedal with mounting screws (5) and lockwashers (6). Tighten to 30-40 ft-lbs (40.7-54.2 Nm).
2. Install clevis pin and **new** circle cotter pin and connect brake rod to brake pedal.
3. Install left rider footrest support (3) with mounting screws (5) and lockwashers (6). Tighten to 30-40 ft-lbs (40.7-54.2 Nm).
4. Install each rider footrest (1) with screw (2), nut and spring washer. Tighten to 84-108 **in-lbs** (9.5-12.2 Nm).

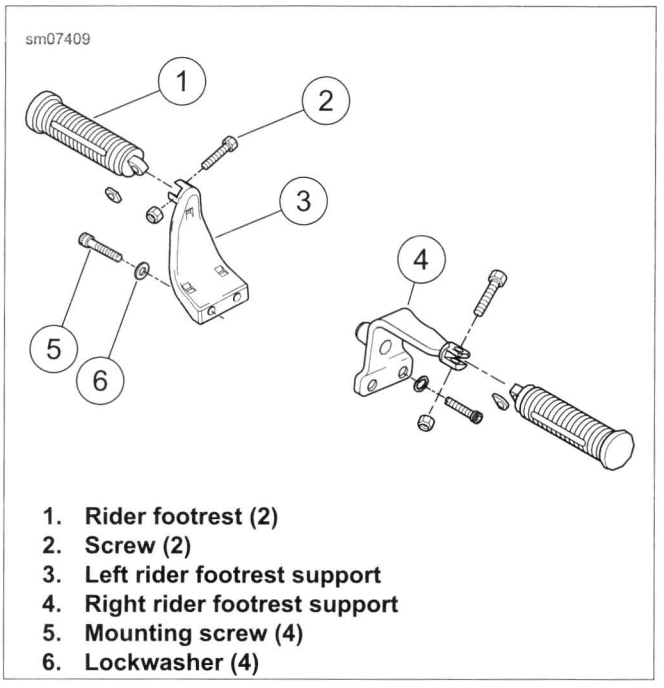

1. **Rider footrest (2)**
2. **Screw (2)**
3. **Left rider footrest support**
4. **Right rider footrest support**
5. **Mounting screw (4)**
6. **Lockwasher (4)**

Figure 2-149. Rider Footrests: Mid Controls (Typical)

RIDER FOOTRESTS: FORWARD CONTROLS

FASTENER	TORQUE VALUE	
Footrest support mounting screws	32-37 ft-lbs	43.4-50.2 Nm
Footrest support mounting screws	32-37 ft-lbs	43.4-50.2 Nm
Footrest mounting screws and nuts	84-108 **in-lbs**	9.5-12.2 Nm

Removal

1. See Figure 2-150. Remove rider footrest screw (2), nut and spring washer to remove rider footrests (1).
2. Disconnect shift rod from shift lever.
3. Remove mounting screws (8) to remove left rider footrest support (3).
4. Remove clevis pin and cotter pin. Disconnect brake rod from brake pedal and remove footrest mounting clevis screw (7), brake pedal, footrest mounting clevis (6) and pivot shaft (5).
5. Remove mounting screws (8) to remove right rider footrest support (4).

Installation

1. See Figure 2-150. Install mounting screws (8) to install right rider footrest support (4). Tighten to 32-37 ft-lbs (43.4-50.2 Nm).
2. Install footrest mounting clevis screw (7), brake pedal, footrest mounting clevis (6) and pivot shaft (5). Connect brake rod to brake pedal using a **new** cotter pin.
3. Install mounting screws (8) to install left rider footrest support (3). Tighten to 32-37 ft-lbs (43.4-50.2 Nm).
4. Connect shift rod to shift lever.
5. Install footrest screw (2), nut, spring washer and rider footrest (1). Tighten to 84-108 **in-lbs** (9.5-12.2 Nm).

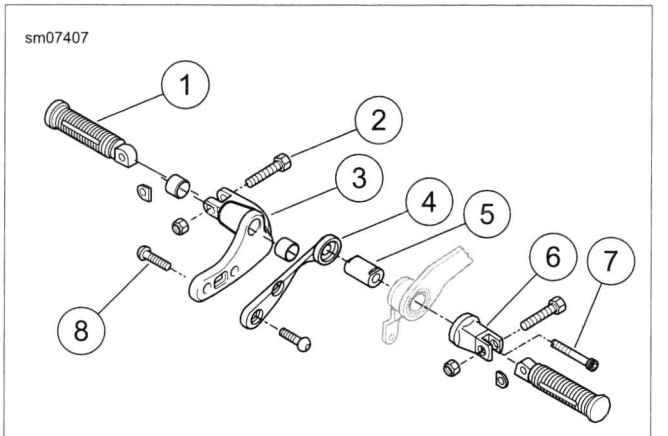

1. **Rider footrest (2)**
2. **Rider footrest screws (2)**
3. **Left rider footrest support**
4. **Right rider footrest support**
5. **Pivot shaft**
6. **Footrest mounting clevis**
7. **Footrest mounting clevis screw**
8. **Mounting screw (4)**

Figure 2-150. Rider Footrests: Forward Controls

PASSENGER FOOTRESTS: ALL BUT FXDB

FASTENER	TORQUE VALUE	
Passenger footrest support mounting screw	25-35 ft-lbs	33.9-47.4 Nm
Passenger footrest screw and nut	84-108 **in-lbs**	9.5-12.2 Nm

Removal

1. See Figure 2-151. Remove passenger footrest screw with nut and spring washer (2) to remove passenger footrest (1).
2. Remove mounting screws (5) to remove left and right passenger footrest supports (3, 4).

Installation

1. See Figure 2-151. Install left (3) and right (4) passenger footrest supports using mounting screws (5). Tighten to 25-35 ft-lbs (33.9-47.4 Nm).
2. Install passenger footrest (1) with passenger footrest screw with nut and spring washer (2). Tighten to 84-108 **in-lbs** (9.5-12.2 Nm).

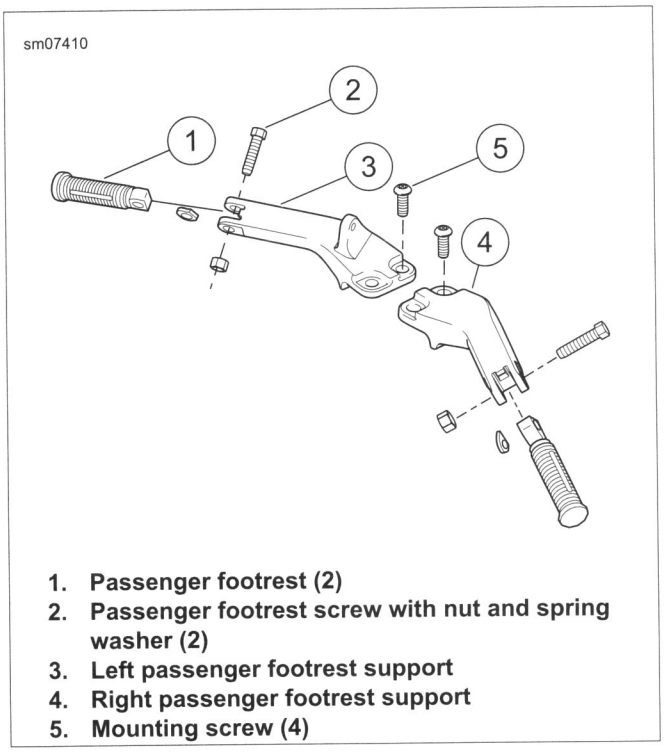

1. Passenger footrest (2)
2. Passenger footrest screw with nut and spring washer (2)
3. Left passenger footrest support
4. Right passenger footrest support
5. Mounting screw (4)

Figure 2-151. Passenger Footrests (Typical)

UPPER AND LOWER NACELLE

FASTENER	TORQUE VALUE	
Slider cover fasteners: FLD	84-120 **in-lbs**	9.5-13.5 Nm
Handlebar riser bolts: FLD	30-40 ft-lbs	40.7-54.2 Nm
Lower nacelle fasteners: FLD	84-120 **in-lbs**	9.5-13.5 Nm
Upper nacelle fasteners: FLD	84-120 **in-lbs**	9.5-13.5 Nm
Headlight to nacelle: FLD	7-10 **in-lbs**	0.8-1.1 Nm
Windshield docking hardware: FLD	84-120 **in-lbs**	9.5-13.5 Nm

Removal

1. Remove brake caliper and front wheel. See 2.4 FRONT WHEEL.
2. Remove front fender. See 2.28 FRONT FENDER.

NOTES

- *Take care when removing and installing handlebars to prevent cosmetic damage to upper nacelle.*
- *Cover painted parts to protect finish.*

3. Remove headlight assembly.
4. Remove handlebar riser bolts and lay handlebars on protective cover on fuel tank.
5. Loosen the pinch screws at upper and lower fork brackets. Slide left and right fork assemblies downward clear of fork brackets.
6. **ABS models:** Remove the brake line manifold from the lower fork bracket.
7. See Figure 2-152. Remove windshield assembly and docking hardware (1).
8. Remove lower nacelle (4) and slider covers (5).
9. Remove upper nacelle (2).

Installation

NOTE

Install lower headlight nacelle and slider covers before fork assemblies are installed into the upper and lower fork brackets.

1. Install slider covers (5) if previously removed. Tighten to 84-120 **in-lbs** (9.5-13.5 Nm).
2. Install lower nacelle (4) along with slider covers (5). Install two lower screws (6) to hold lower nacelle in place but do not tighten.
3. Slide left and right fork assemblies upward and into upper and lower fork brackets.
4. Install upper nacelle (2), but do not tighten fasteners.
5. See 2.25 HANDLEBAR: FLD. Install handlebar riser bolts through upper fork clamp and upper nacelle. Tighten to 30-40 ft-lbs (40.7-54.2 Nm).
6. Tighten two lower nacelle screws to 84-120 **in-lbs** (9.5-13.5 Nm).
7. Tighten two upper nacelle screws to 84-120 **in-lbs** (9.5-13.5 Nm).
8. Install headlight assembly. Tighten to 7-10 **in-lbs** (0.8-1.1 Nm).
9. Install docking hardware and windshield assembly. Tighten to 84-120 **in-lbs** (9.5-13.5 Nm).

NOTE

ABS models: *see 2.15 ABS MODULE (EHCU).*

10. **ABS models:** Install the brake line manifold to the lower fork bracket and lower nacelle.
11. Install front fender. See 2.28 FRONT FENDER.
12. Install front wheel and caliper. See 2.4 FRONT WHEEL.

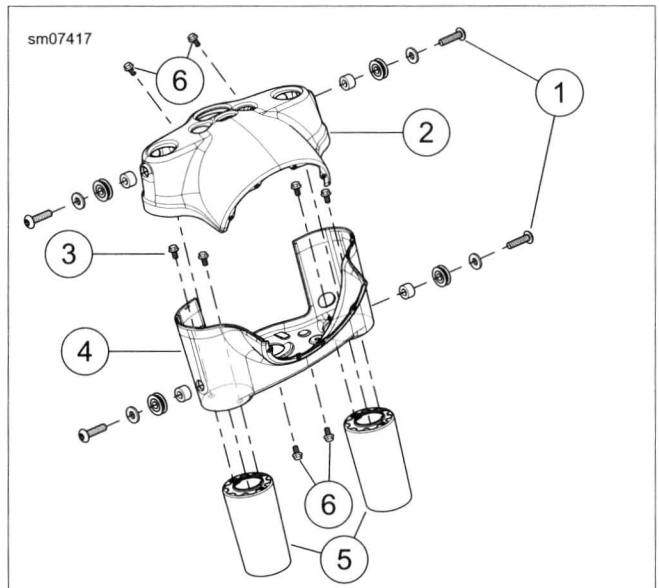

1. **Docking hardware (4)**
2. **Upper nacelle**
3. **Slider cover screws (4)**
4. **Lower nacelle**
5. **Slider covers (2)**
6. **Upper and lower nacelle screws (4)**

Figure 2-152. Headlamp Nacelles and Slider Covers

WINDSHIELD

Removal

1. See Figure 2-153. Raise the wireform latch springs (1) on both sides of the windshield (2).
2. Gently pull on the top of the windshield until the upper notches on the windshield brackets are free of the upper grommets.
3. Carefully raise the windshield until the lower notches are free of the lower grommets.
4. Remove windshield.

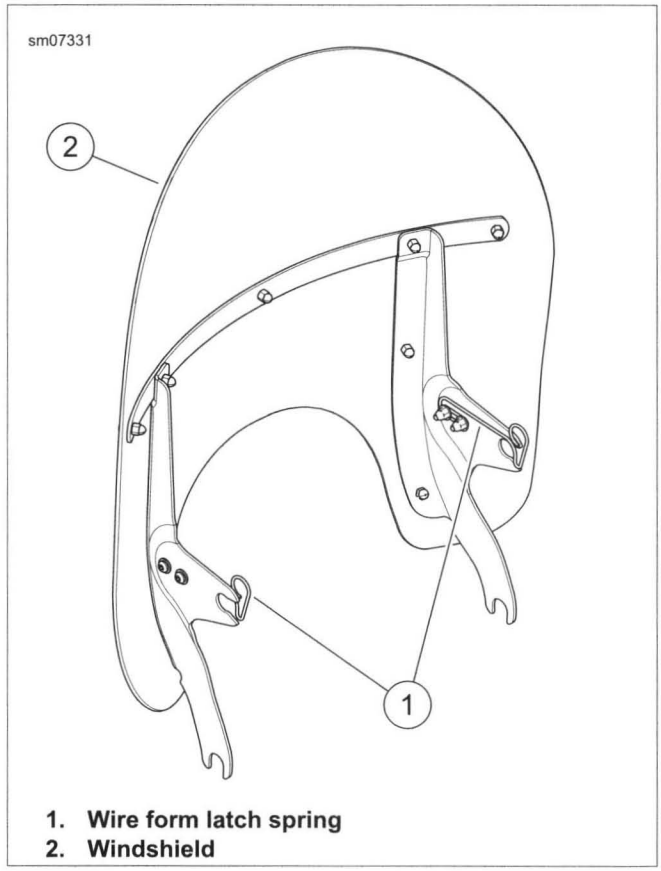

1. **Wire form latch spring**
2. **Windshield**

Figure 2-153. Windshield (FLD)

Installation

NOTE

Firmly seat windshield brackets to prevent scratching headlamp nacelle.

1. Carefully insert the windshield brackets around the headlamp nacelle. Lower the windshield into position until the lower notches on the windshield brackets are seated on the lower grommets.
2. See Figure 2-153. Gently push the top of the windshield toward the rear until the upper notches fully engage the upper grommets (2).
3. Push down on the wireform latch springs (1), so that they overhang the rubber grommets. If some adjustment is necessary, loosen the retaining screws and rotate the latch springs into the proper position.

WINDSHIELD WINDOW

PART NUMBER	TOOL NAME
HD-25070	ROBINAIR HEAT GUN

FASTENER	TORQUE VALUE	
Windshield window screws: FLD	20-25 **in-lbs**	2.3-2.8 Nm

Removal

1. Remove windshield. See 2.33 WINDSHIELD: FLD.
2. Place windshield front side up on clean padded surface.
3. See Figure 2-154. Remove acorn nuts (8). Remove shorter and longer windshield mounting screws (6, 7) from right and left outer vertical windshield braces (3) to release right and left wireform mounting bracket (2).
4. Remove three remaining screws from horizontal brace.

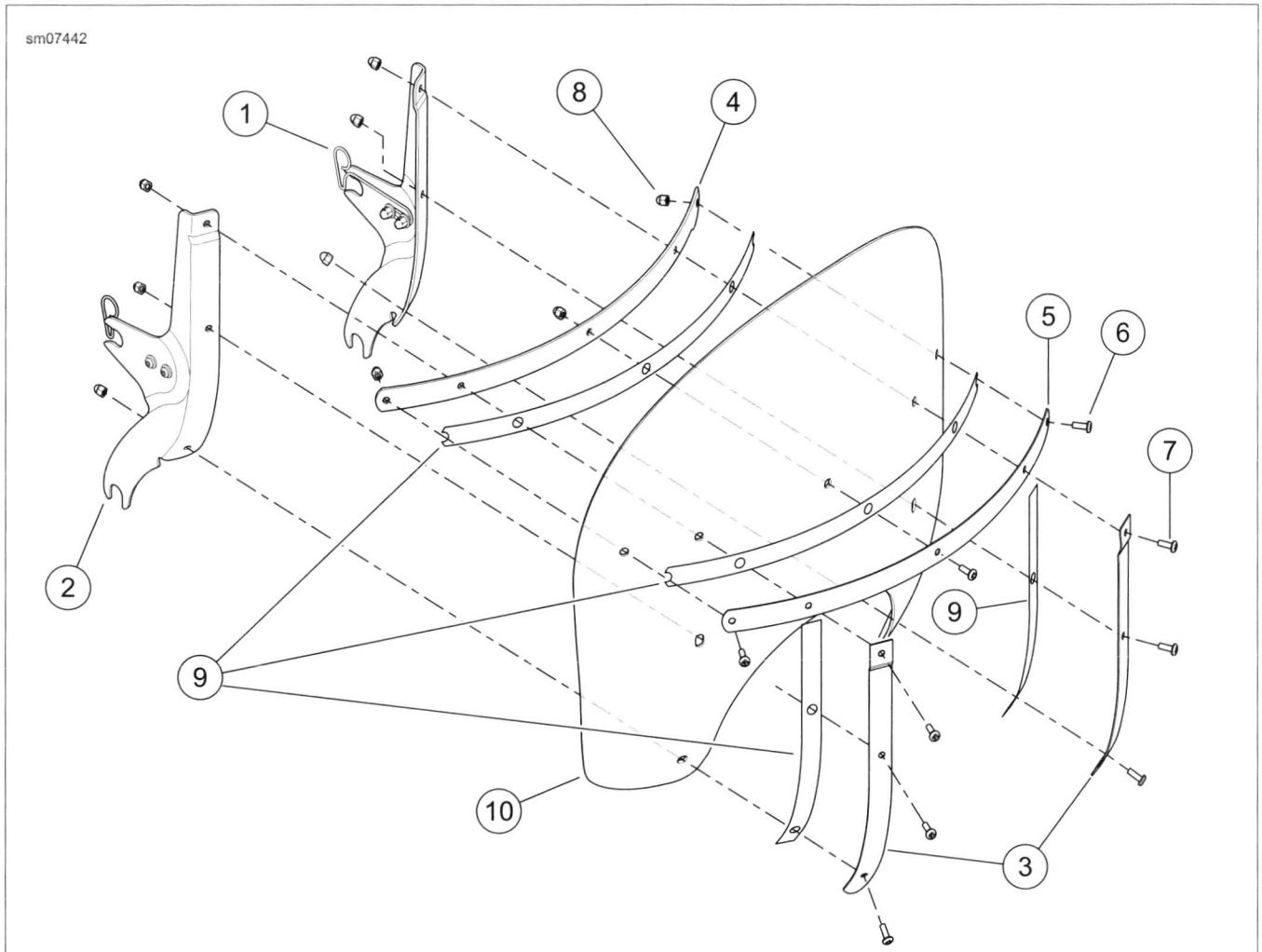

1. **Wireform latch spring (2)**
2. **Right and left wireform mounting bracket**
3. **Right and left outer vertical windshield brace**
4. **Thicker horizontal windshield brace**
5. **Thinner horizontal windshield brace**
6. **Shorter windshield mounting screw (7)**
7. **Longer windshield mounting screw (2)**
8. **Acorn nut (9)**
9. **Cushioned adhesive tape (4)**
10. **Windshield**

Figure 2-154. Windshield Assembly: FLD

5. Carefully pry braces from windshield (10). Discard windshield.

⚠WARNING

Be sure to follow manufacturer's instructions when using the Robinair Heat Gun or any other radiant heating device. Failure to follow manufacturer's instructions can cause a fire, which could result in death or serious injury. (00379a)

6. Remove cushioned adhesive tape (9) from braces (3, 4, 5):
   a. Liberally apply 3M GENERAL PURPOSE ADHESIVE REMOVER and allow to soak.
   b. Apply heat with ROBINAIR HEAT GUN (Part No. HD-25070).
   c. Peel cushioned adhesive tape (9) from braces.
   d. Remove any remaining adhesive with 3M GENERAL PURPOSE ADHESIVE REMOVER.

Installation

NOTES

- *Carefully align the holes in the new tape with the holes in the braces.*
- *The thicker horizontal brace (4) mounts to the **rear** surface of the windshield.*

1. See Figure 2-154. Remove paper backing from one side of each cushioned adhesive tape (9). Apply to windshield side of each brace (3, 4, 5).
2. Place **new** windshield with front side down on clean padded surface.
3. Remove paper backing from cushioned adhesive tape (9) on thicker horizontal brace. Align holes in brace with holes in windshield and press brace into position.
4. Turn windshield over (front side up).
5. Remove paper backing from cushioned adhesive tape (9) on thinner horizontal brace. Align holes in brace with holes in windshield. Edges of inner and outer braces must be even. Press into position.
6. Install three short screws through the middle and outer holes of the horizontal braces. Loosely install acorn nuts on rear side.
7. See Figure 2-154. Remove paper backing from cushioned adhesive tape (9) on vertical brace. With the stepped end overlapping the horizontal brace and the end with the slight bend angled outward, align holes in brace with holes in windshield. Press into position.
8. Position mounting bracket on rear side of windshield with the wireform facing inboard.
9. Install the longer screw at the stepped end where the vertical brace overlaps the horizontal brace, and short screws in the remaining holes. Loosely install acorn nuts.
10. Install second vertical brace and mounting bracket in a similar manner.
11. See Figure 2-155. Following the sequence shown, tighten all screws to 20-25 **in-lbs** (2.3-2.8 Nm).
12. Install windshield. See 2.33 WINDSHIELD: FLD.

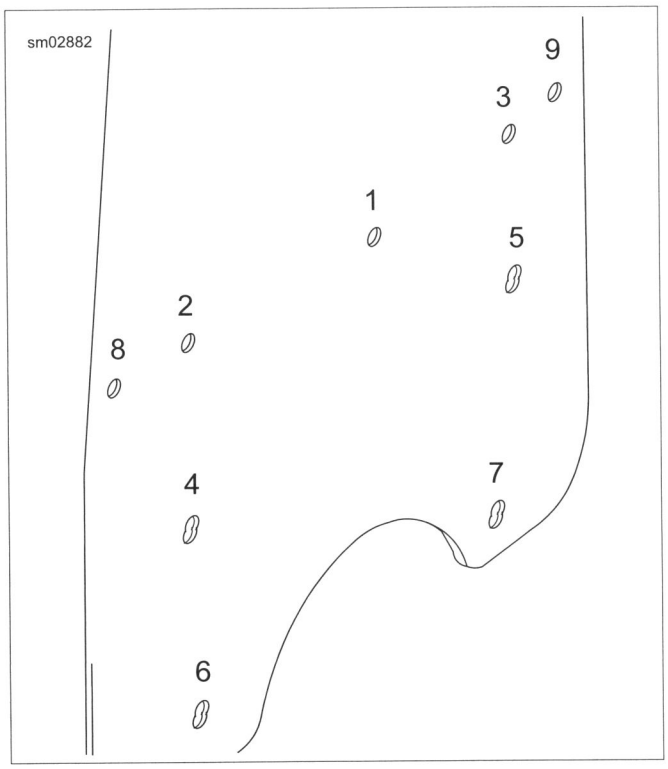

Figure 2-155. Windshield Torque Sequence

SADDLEBAG

FASTENER	TORQUE VALUE	
Bracket, saddlebag theft prevention: FLD	24-36 **in-lbs**	2.7-4.1 Nm
Saddlebag latch pivot screw: FLD	96-120 **in-lbs**	10.8-13.6 Nm
Saddlebag inner/outer support screws: FLD	96-120 **in-lbs**	10.8-13.6 Nm
Saddlebag lower mount screws: FLD	96-120 **in-lbs**	10.8-13.6 Nm
Saddlebag latch attaching screws: FLD	14-20 **in-lbs**	1.6-2.3 Nm

Removal

1. Open saddlebag.
2. See Figure 2-156. Inside the saddlebag, pull the knob outward and rotate to the UNLOCK (2) position.
3. See Figure 2-157. Hold the saddlebag and slide it toward the rear to remove it from the three docking posts.

NOTES

- *Unless secured in the upright position, the left saddlebag is easily tipped.*
- *The right saddlebag has a larger cavity along the bottom to accommodate the rear fork and axle.*
- *Place saddlebag on a level surface, preferably supported against a wall or other surface.*
- *Avoid dragging the saddlebag on the ground to prevent scratches.*

Installation

NOTE

Replace missing or damaged docking bushings before mounting saddlebag.

1. See Figure 2-157. With the knob in the UNLOCK position, slide the saddlebag on to the motorcycle, engaging the saddlebag brackets to the three docking posts (1).
2. See Figure 2-156. Pull the knob outward and rotate to the LOCK (1) position until the knob snaps into place.
3. Check that the saddlebag is secure on all three docking posts and the locking latch is secure. Gently pull the saddlebag to the rear to check that it is secure.
4. Close saddlebag and make sure that the lid is shut and latched.

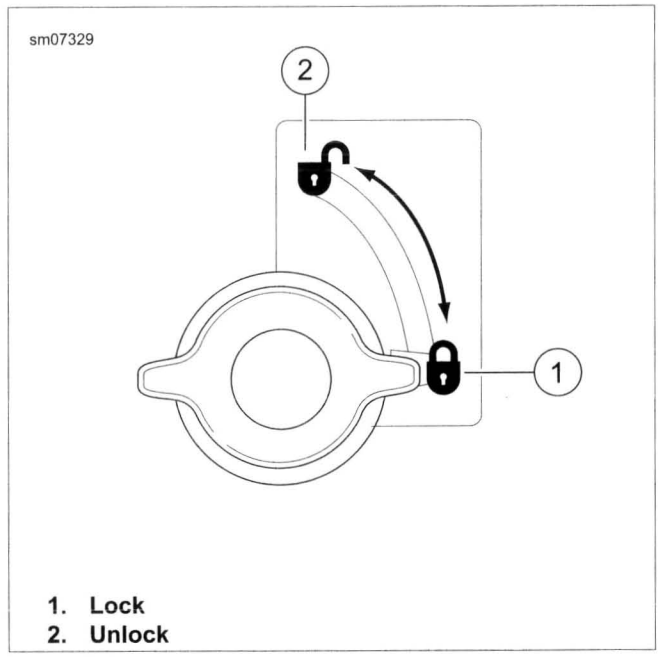

1. Lock
2. Unlock

Figure 2-156. Saddlebag Lock Knob: FLD Model

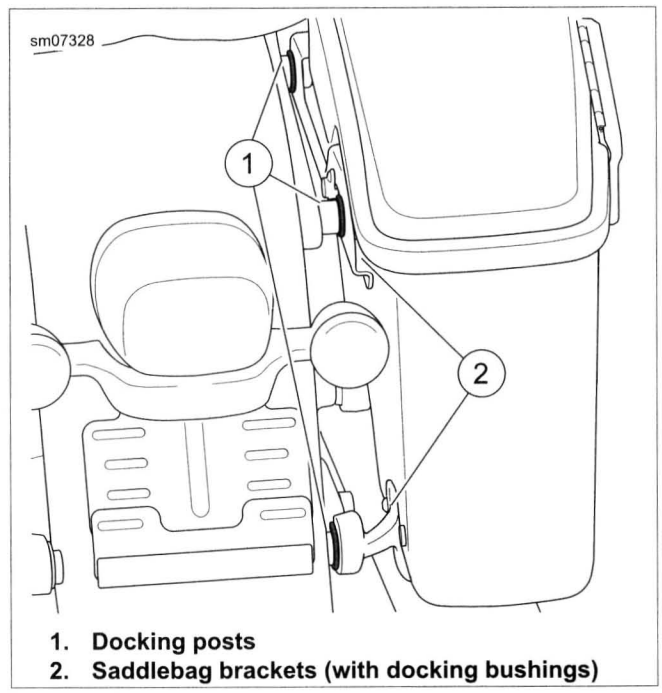

1. Docking posts
2. Saddlebag brackets (with docking bushings)

Figure 2-157. Saddlebag Installation: FLD Model

Disassembly

1. Remove saddlebag.
2. See Figure 2-158. Remove two check strap screws (1) to release tether assembly from saddlebag.
3. Remove two latch screws (2) to release latch and lid from saddlebag. Set lid assembly aside.

NOTE

See 2.34 SADDLEBAGS: FLD, Saddlebag Lid for service of the saddlebag lid assembly.

4. See Figure 2-159. Remove screws (17). Remove lower mount (16).
5. Remove outer support screws (15) and outer support plate (12).
6. Remove cap (11).
7. Hold nut (10). Remove screw (1). Remove latch (2), spring (3), spacer (6) and knob (9).
8. Remove screw (4) and washer (5). Remove inner support plate (8).
9. Remove screws (14) and theft prevention bracket (13) if necessary.

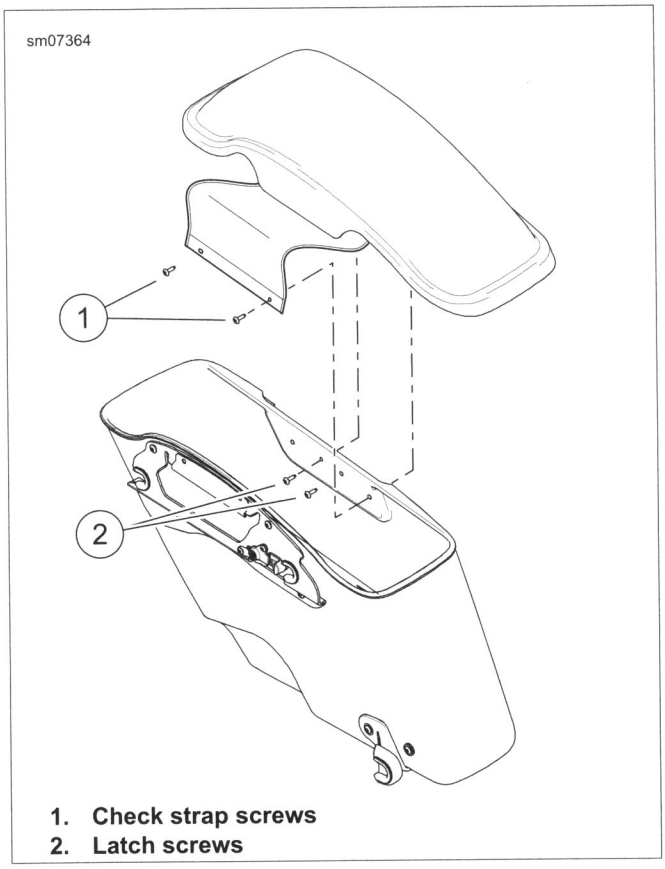

1. Check strap screws
2. Latch screws

Figure 2-158. Saddlebag: FLD

Assembly

1. See Figure 2-159. Install theft prevention bracket (13). Tighten to 24-36 **in-lbs** (2.7-4.1 Nm).
2. Hold inner support in place and loosely install screw (4) and washer (5). Loosely install a second outer support screw (15) to help support inner support.
3. Install latch components (1, 2, 3, 6, 9, 10). Tighten to 96-120 **in-lbs** (10.8-13.6 Nm). Install cap (11).
4. Install outer support plate (12). Tighten screws (4, 15) to 96-120 **in-lbs** (10.8-13.6 Nm).
5. Install lower mount (16). Tighten to 96-120 **in-lbs** (10.8-13.6 Nm).
6. Install lid assembly. Tighten screws to 14-20 **in-lbs** (1.6-2.3 Nm).
7. Install saddlebag.

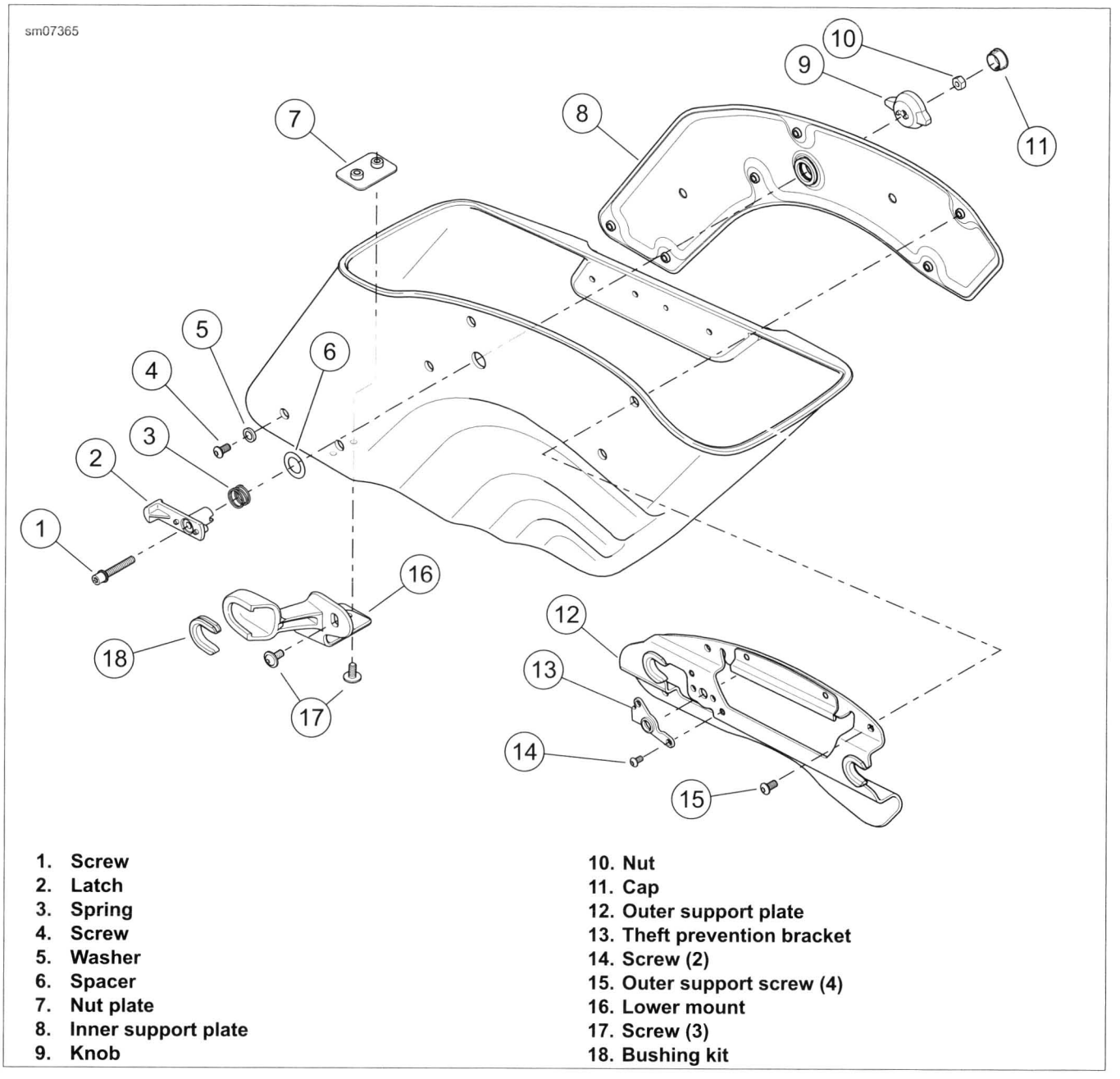

1. **Screw**
2. **Latch**
3. **Spring**
4. **Screw**
5. **Washer**
6. **Spacer**
7. **Nut plate**
8. **Inner support plate**
9. **Knob**
10. **Nut**
11. **Cap**
12. **Outer support plate**
13. **Theft prevention bracket**
14. **Screw (2)**
15. **Outer support screw (4)**
16. **Lower mount**
17. **Screw (3)**
18. **Bushing kit**

Figure 2-159. Saddlebag Lower: FLD

SADDLEBAG LID

FASTENER	TORQUE VALUE	
Tether assembly screws: FLD	8-12 **in-lbs**	0.9-1.4 Nm
Saddlebag latch screws: FLD	14-20 **in-lbs**	1.6-2.3 Nm
Saddlebag latch faceplate screws: FLD	14-20 **in-lbs**	1.6-2.3 Nm
Saddlebag latch faceplate nut: FLD	7-17 **in-lbs**	0.8-1.9 Nm
Saddlebag lock screws: FLD	30-40 **in-lbs**	3.4-4.5 Nm

Seal

1. Remove seal from lid.
2. Clean old adhesive using 3M GENERAL PURPOSE ADHESIVE REMOVER.
3. Verify that seal insert is in place and located near the end of the seal.

NOTE

See Figure 2-160. The seal adheres to the side of the inner flange surface.

4. See Figure 2-161. Align end with tube inside lid with line on saddlebag lid. Begin installation being sure that seal is flush with edge of flange.
5. Do not stretch seal during installation and continue until ends meet.

NOTE

Ends must meet with no gap.

6. Trim flush or slightly long and complete installation.

7. Close saddlebag.
8. Inspect to verify that seal is in complete contact with saddlebag.

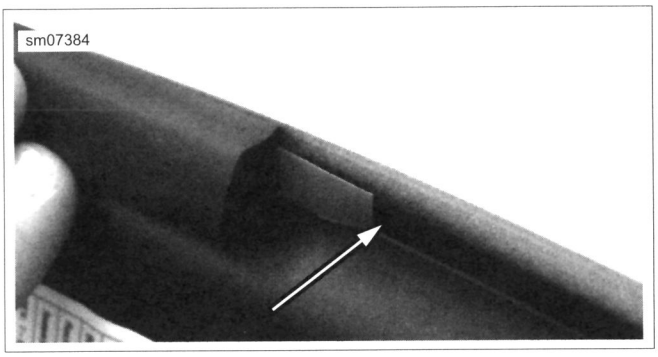

Figure 2-160. Saddlebag Lid Seal

Disassembly

NOTE

Lock assembly, faceplate and tether assembly can be replaced without disassembling saddlebag.

1. Remove lid from saddlebag. See 2.34 SADDLEBAGS: FLD, Saddlebag.
2. See Figure 2-161. Remove screws (9) and lock (10).
3. Remove screws (4), nut plate (11) and nut (7). Remove faceplate (5).
4. Remove screws (6) and latch assembly (8).
5. Remove screws (3). Remove tether assembly (1).

Assembly

1. Secure tether assembly (1) to lid with screws. Tighten to 8-12 **in-lbs** (0.9-1.4 Nm)
2. Install latch assembly. Tighten to 14-20 **in-lbs** (1.6-2.3 Nm).
3. Install faceplate. Tighten screws (4) to 14-20 **in-lbs** (1.6-2.3 Nm). Tighten nut (7) to 7-17 **in-lbs** (0.8-1.9 Nm).
4. Install lock assembly. Tighten screws to 30-40 **in-lbs** (3.4-4.5 Nm).
5. Install lid on saddlebag. See 2.34 SADDLEBAGS: FLD, Saddlebag.

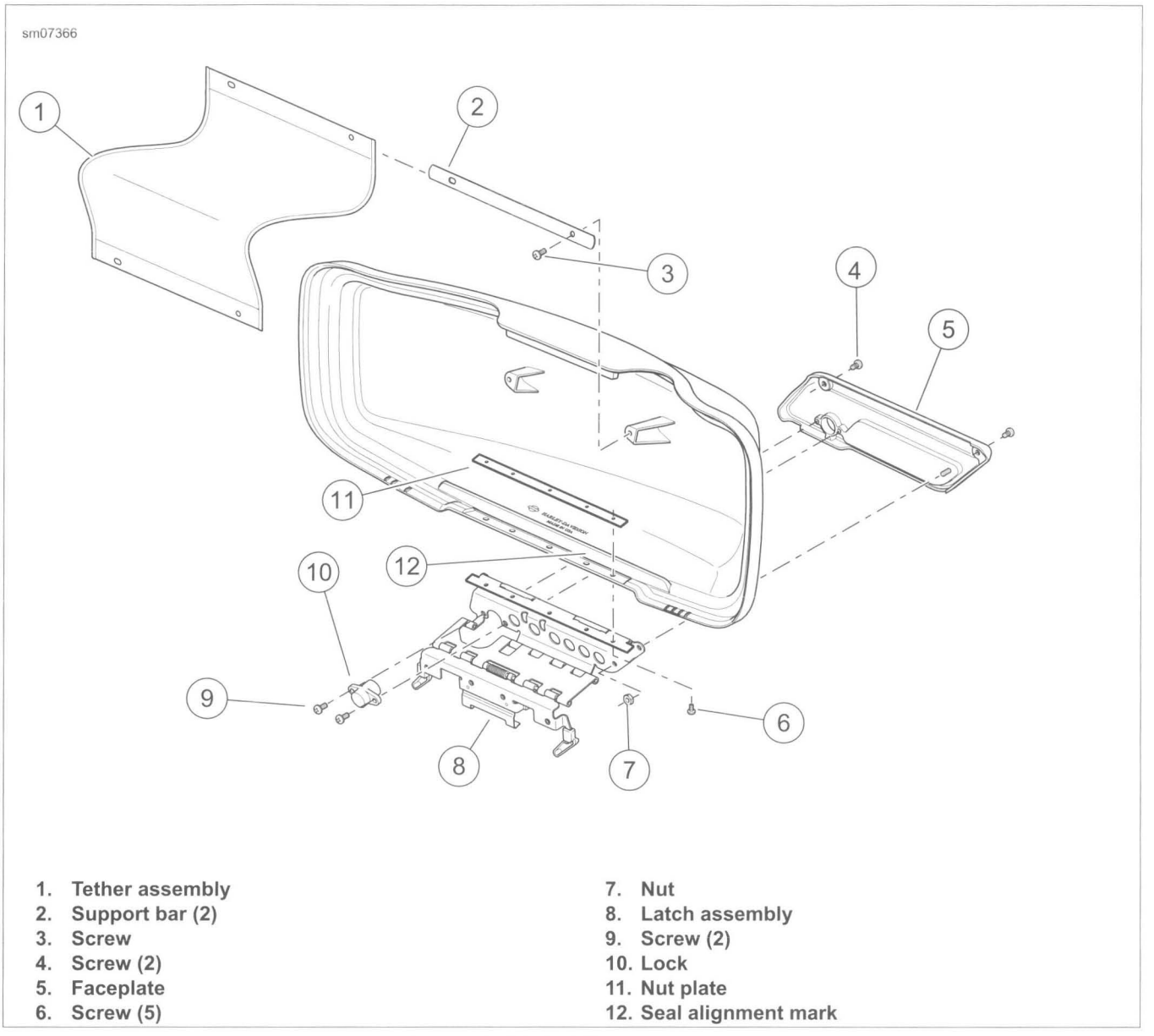

1. Tether assembly
2. Support bar (2)
3. Screw
4. Screw (2)
5. Faceplate
6. Screw (5)
7. Nut
8. Latch assembly
9. Screw (2)
10. Lock
11. Nut plate
12. Seal alignment mark

Figure 2-161. Saddlebag Lid: FLD

CLEANING

1. Raise the motorcycle.
2. See Figure 2-162. Inspect top of catch (6 or 8) and pivot block (10) mating surface. If covered with dirt, wipe off dirt with a shop towel.
3. Apply ANTI-SEIZE LUBRICANT to mating surface.
4. Move jiffy stand leg (13) forward and back to spread lubricant between mating parts.
5. Apply ANTI-SEIZE LUBRICANT on shaft of jiffy stand leg and pin (16) to lubricate the mating surface between pin and pivot block (10). Move leg back and forth and downward while spraying lubricant.
6. Check that jiffy stand operates correctly before placing in service.

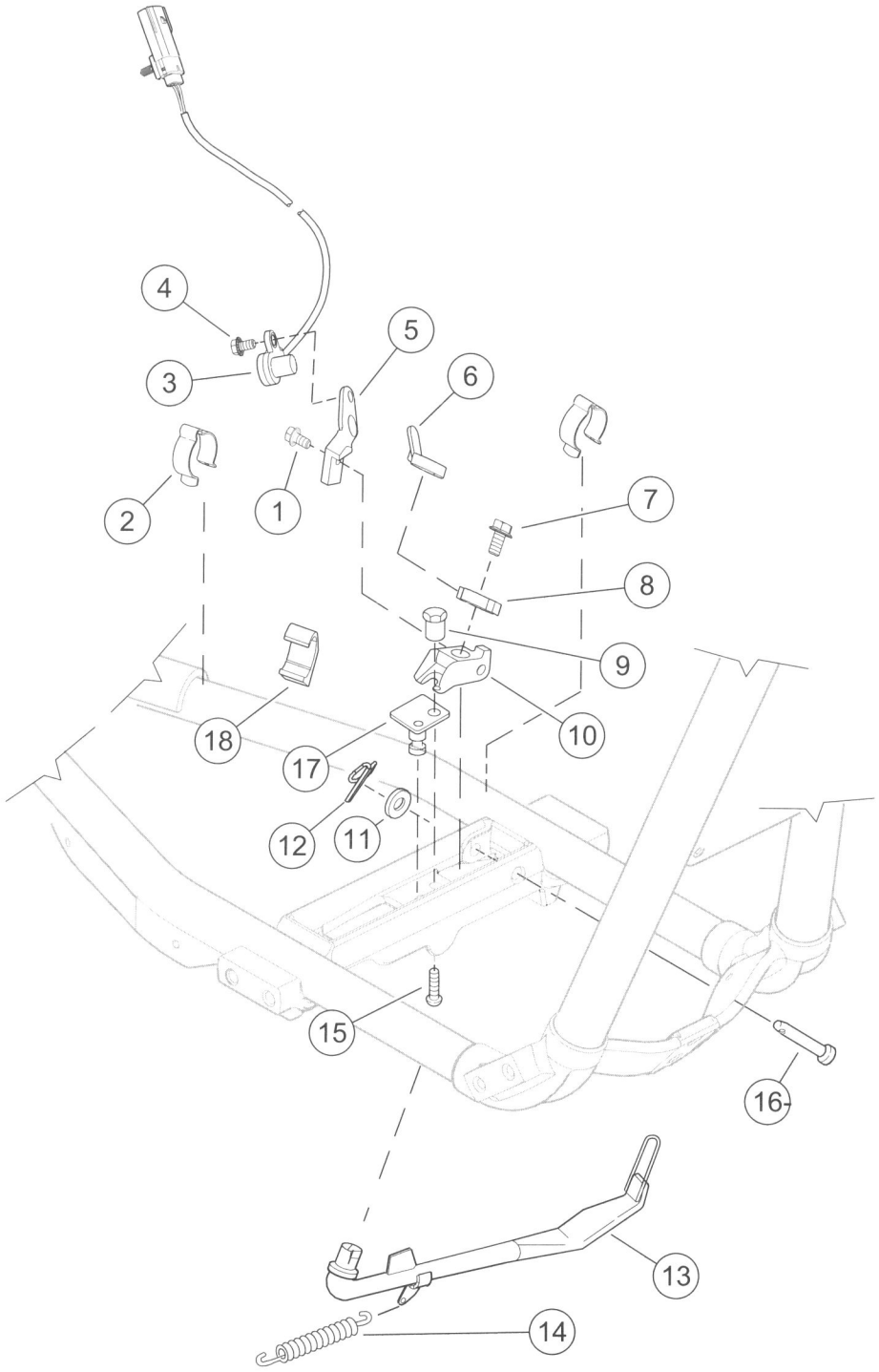

1. Sensor bracket screw (HDI)
2. Harness retainer (2) (HDI)
3. Sensor (HDI)
4. Sensor screw (HDI)
5. Sensor bracket (HDI)
6. Catch (HDI)
7. Bolt
8. Catch (non-HDI)
9. Threaded spacer
10. Pivot block
11. Washer
12. Pretzel clip
13. Jiffy stand leg
14. Spring
15. Screw
16. Pin (secures pivot block)
17. Anchor plate
18. Bumper

Figure 2-162. Jiffy Stand

JIFFY STAND SENSOR: HDI MODELS

FASTENER	TORQUE VALUE	
Jiffy stand sensor screw	96-144 **in-lbs**	10.8-16.3 Nm

1. See Figure 2-163. Record harness routing for ease of assembly. Disconnect sensor connector [133] located under the seat.
2. See Figure 2-162. Remove harness retainers (2).
3. Remove sensor screw (4). Remove sensor (3).
4. If necessary, remove sensor bracket screw (1). Remove sensor bracket (5).
5. Installation is in reverse of removal. Tighten screws (1, 4) to 96-144 **in-lbs** (10.8-16.3 Nm).

NOTES

- *See Figure 2-163. Verify that the sensor harness is routed to the inside of the left-lower frame and under the rear engine mount casting.*
- *See Figure 2-164. Route the sensor harness in the same retainer cavity (3) as the front engine harness (2).*

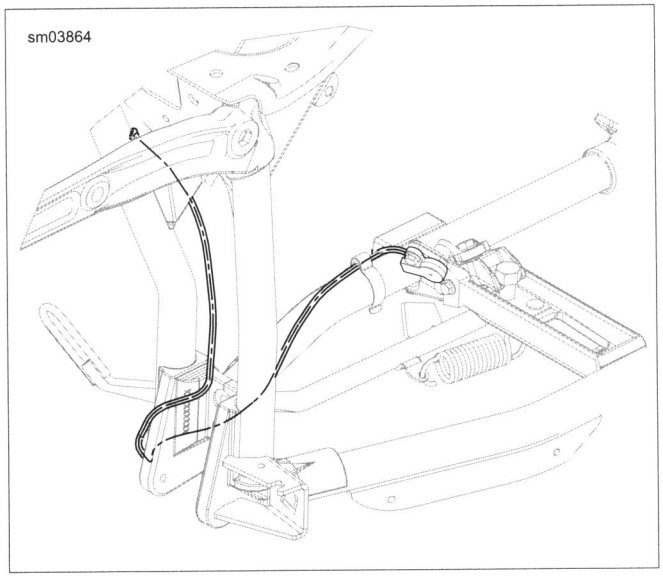

Figure 2-163. Jiffy Stand Sensor Harness Routing

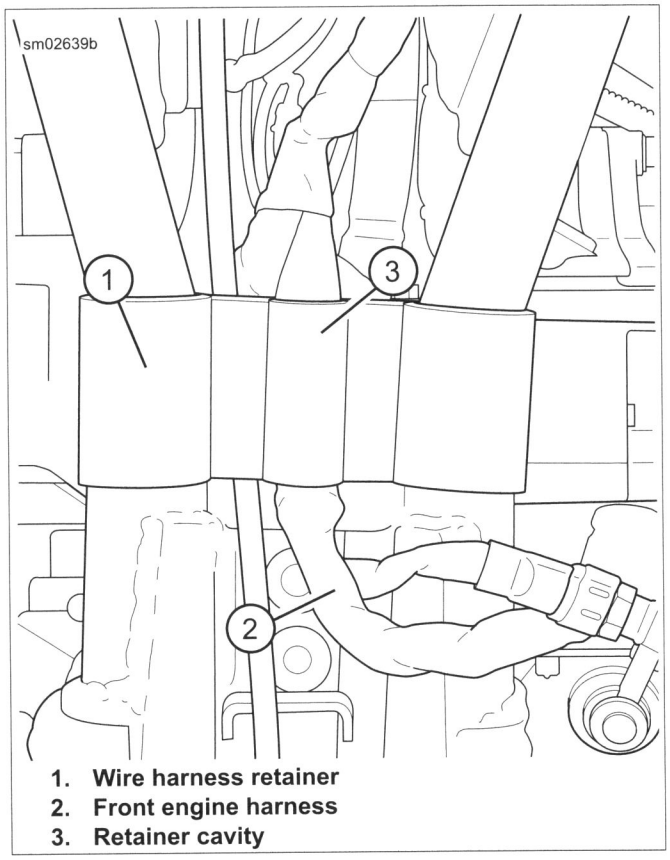

1. **Wire harness retainer**
2. **Front engine harness**
3. **Retainer cavity**

Figure 2-164. Harness Retainer

REMOVAL

⚠WARNING

Block or jack vehicle under frame in a way that the vehicle will not fall over. Failure to properly block and/or raise the vehicle could result in death or serious injury. (00462c)

1. Block motorcycle underneath frame so both wheels are raised off the ground.
2. See Figure 2-162. Remove pretzel clip (12) and washer (11) from pin (16). Discard pretzel clip.
3. Detach spring (14) from jiffy stand and anchor plate (17).
4. Pull pin (16) from between frame tubes. Jiffy stand and pivot block components will drop as an assembly.

INSTALLATION

⚠WARNING

If leg stop is incorrectly installed, excessive wear can allow vehicle to fall when rested on jiffy stand, which could result in death or serious injury. (00479b)

1. See Figure 2-162. Place pivot block (10) and jiffy stand leg (13) assembly between frame tubes.
2. Insert pin (16) from front of vehicle through frame tubes and pivot block. Secure with washer and a **new** pretzel clip (12).

3. Attach spring (14) to anchor plate (17) and jiffy stand leg. When properly installed, hook on spring side connected to jiffy stand leg faces upward.
4. Apply ANTI-SEIZE LUBRICANT on shaft of jiffy stand leg and pin to lubricate the mating surface between pin and pivot block. Move leg back and forth and downward while spraying lubricant.
5. Check that jiffy stand operates correctly before placing in service.

REMOVAL

PART NUMBER	TOOL NAME
HD-47853	FORK LOCK WRENCH

1. Remove decal.
2. See Figure 2-165. Place FORK LOCK WRENCH (Part No. HD-47853) (1) on face nut (2). Turn fork lock wrench clockwise to loosen face nut. Turn face nut clockwise until it bottoms on fork lock.
3. See Figure 2-166. Remove plug from fork lock boss cavity (4).
4. Rotate fork lock (2) clockwise to allow fork lock boss (3) to clear fork lock boss cavity (4). Remove fork lock from frame.

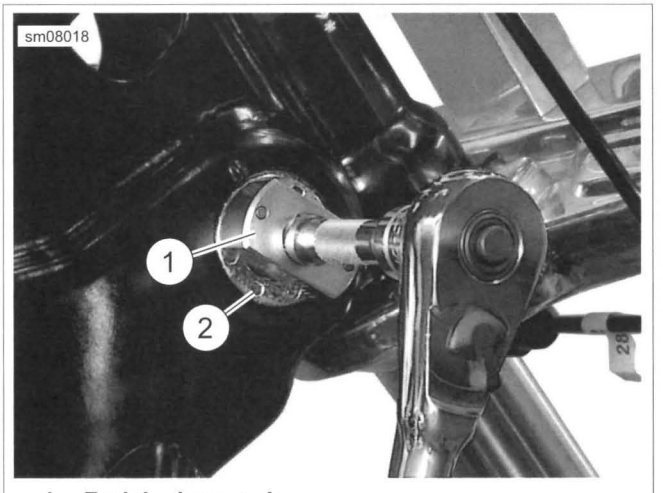

1. **Fork lock wrench**
2. **Face nut**

Figure 2-165. Fork Lock Wrench

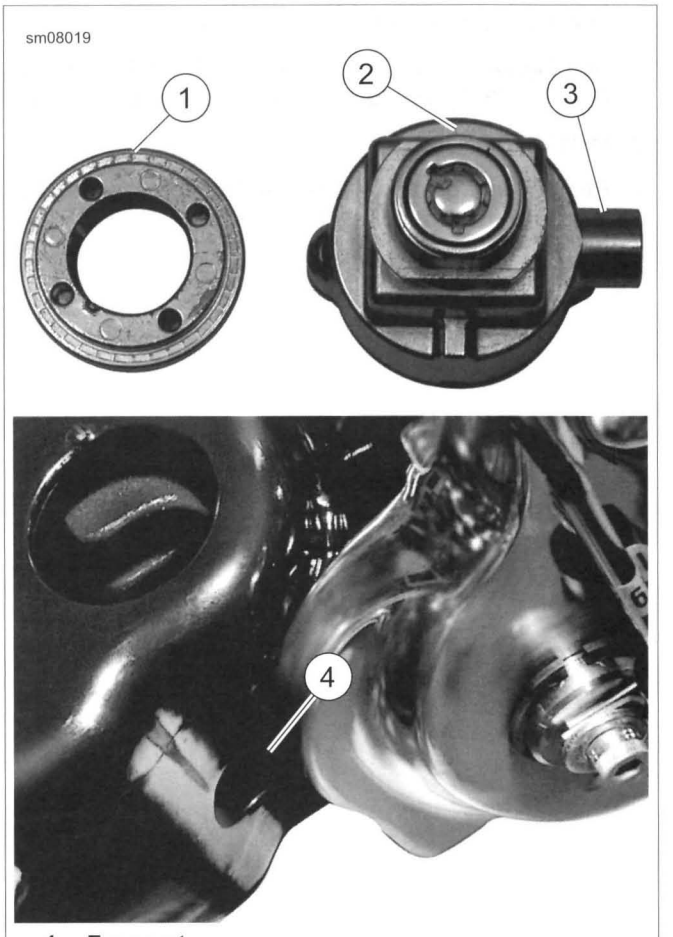

1. **Face nut**
2. **Fork lock**
3. **Fork lock boss**
4. **Fork lock boss cavity**

Figure 2-166. Fork Lock

INSTALLATION

PART NUMBER	TOOL NAME
HD-47853	FORK LOCK WRENCH

1. See Figure 2-166. Apply a drop of LOCTITE 243 MEDIUM STRENGTH THREADLOCKER AND SEALANT (blue) to threads of face nut (1).
2. Install face nut on fork lock (2). Turn face nut clockwise until it bottoms on fork lock.
3. Install connector on fork lock.
4. With fork lock boss (3) facing front of vehicle, install fork lock into frame.
5. Install plug into fork lock boss cavity (4).
6. See Figure 2-167. Align flats on fork lock with slots (2) in fork lock cavity (1).

NOTE

In next step, setting fork lock in the "locked" position will ease installation.

7. See Figure 2-166. Rotate fork lock until fork lock boss (3) engages fork lock boss cavity (4).
8. To verify proper fork lock positioning, hold fork lock as far forward as possible in frame while tightening.
9. See Figure 2-165. Using FORK LOCK WRENCH (Part No. HD-47853), turn face nut counterclockwise until tight.
10. Install decal.
11. Remove and save key code tag (on key ring with two keys). Key code is not marked on keys.
12. Test fork lock operation.

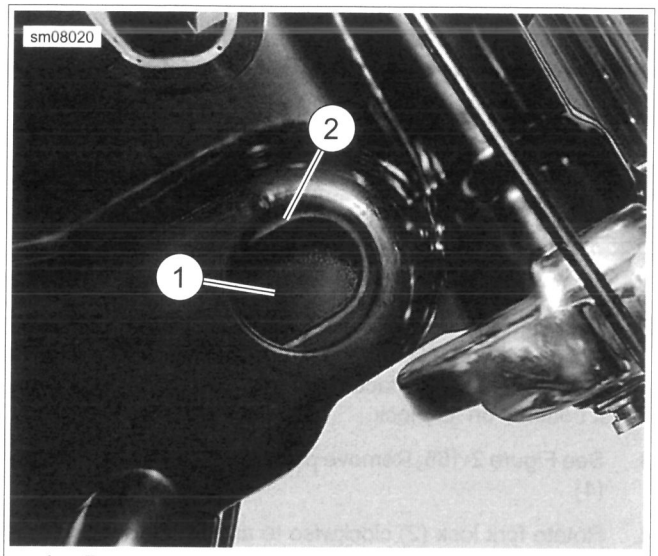

1. **Fork lock cavity**
2. **Slot**

Figure 2-167. Fork Lock Cavity

REMOVAL

⚠WARNING

Block or jack vehicle under frame in a way that the vehicle will not fall over. Failure to properly block and/or raise the vehicle could result in death or serious injury. (00462c)

NOTE

Motorcycle must be upright and level before performing this procedure.

Front Isolator

1. Support front of engine with jack.
2. See Figure 2-168. Remove bolts, lockwashers and washers securing front isolator (2) to frame.
3. Remove bolts, flange nuts and washers securing the front isolator (2) to the front engine bracket (1). Remove front isolator (2).

Rear Isolator

1. Remove left side footpeg and debris deflector.
2. Use a jack on the oil pan to support rear of transmission.
3. See Figure 2-168. Use a long extension, from right side of motorcycle and a wrench on the left side of rear isolator (3). Remove bolts, flange nuts and washers securing rear isolator to powertrain.

NOTE

Vary the load on the mount to slip the bolts out of the rear isolator (3).

4. Remove bolts, lockwashers and washers securing rear isolator (3) to frame. Remove rear isolator (3).

INSTALLATION

FASTENER	TORQUE VALUE	
Front isolator mounting bolts to front engine bracket	22-27 ft-lbs	29.9-36.6 Nm
Front isolator mounting bolts to frame	22-27 ft-lbs	29.9-36.6 Nm
Front engine bracket bolts to engine	25-32 ft-lbs	34.0-43.3 Nm
Engine mount flange nut	22-27 ft-lbs	29.9-36.6 Nm
Rear isolator to frame bolts	22-27 ft-lbs	29.9-36.6 Nm

Front Isolator

1. Support front of engine with jack.
2. See Figure 2-168. Install front engine bracket (1) to front of engine with bolts and washers. Tighten finger-tight.
3. Place front isolator (2) in position on frame and install bolts lockwashers and washers securing front isolator (2) to frame. Tighten finger-tight.
4. Install bolts, flange nuts and washers securing front isolator (2) to front engine bracket (1). Tighten flange nuts to 22-27 ft-lbs (29.9-36.6 Nm).
5. Tighten isolator to frame bolts to 22-27 ft-lbs (29.9-36.6 Nm).
6. Tighten front engine bracket bolts to 25-32 ft-lbs (34.0-43.3 Nm).

NOTE

For best isolator performance, minimum clearance between engine bracket and top rubber snubber on engine isolator is 0.030 in (0.76 mm). Measure the vehicle at rest, vertically without jack under engine.

Rear Isolator

1. See Figure 2-168. Use a jack on the oil pan to support rear of transmission.

NOTE

Vary the load on the rear isolator (3) to slip the bolts in.

2. Place rear isolator (3) in position on frame and install bolts, lockwashers and washers. Tighten finger-tight.
3. Use a long extension, from right side of motorcycle and a wrench on the left side of rear isolator (3). Install bolts, flange nuts and washers. Tighten flange nuts to 22-27 ft-lbs (29.9-36.6 Nm).
4. Tighten rear isolator (3) to frame bolts to 22-27 ft-lbs (29.9-36.6 Nm).
5. Install left side footpeg and debris deflector.

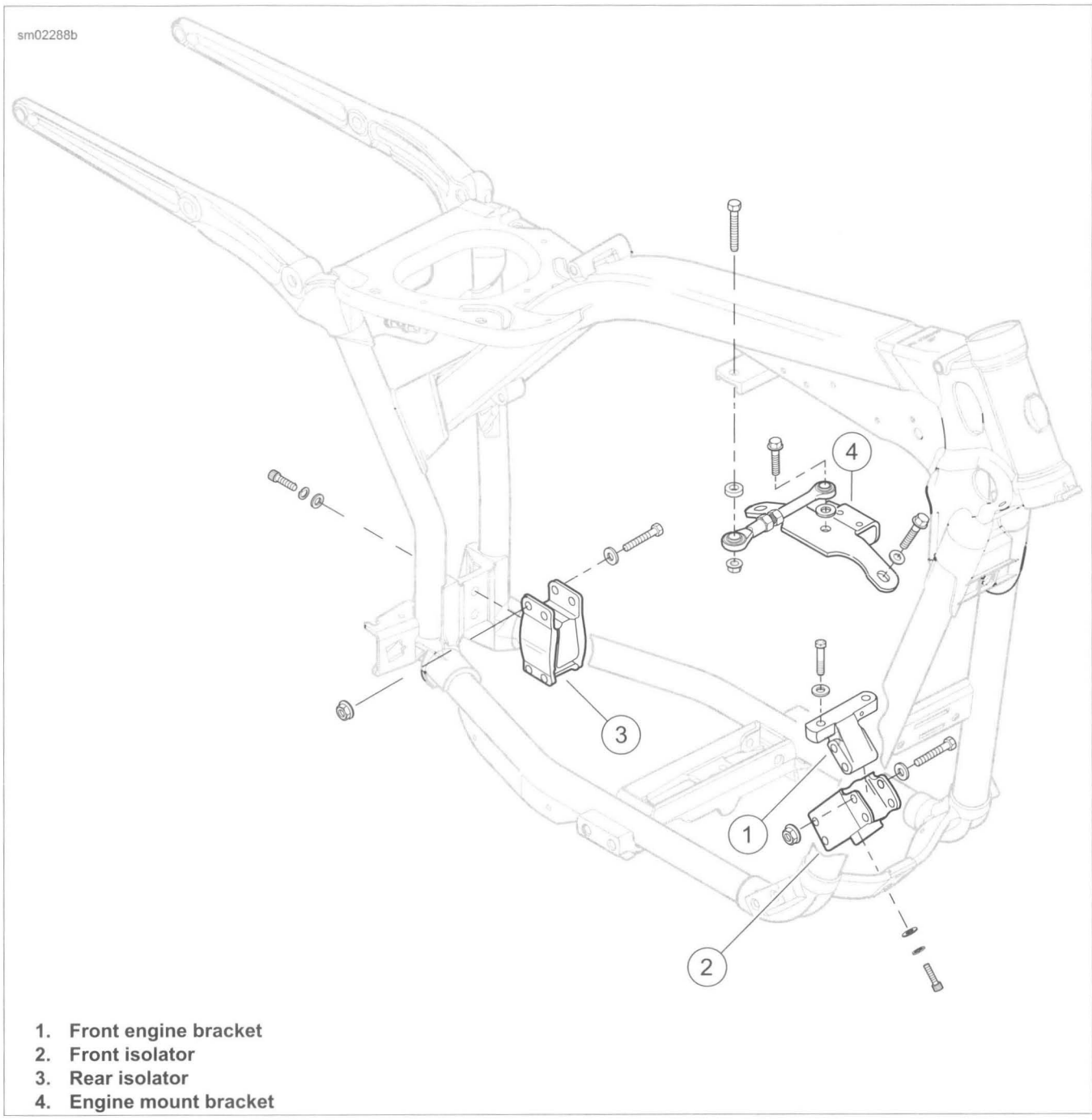

1. Front engine bracket
2. Front isolator
3. Rear isolator
4. Engine mount bracket

Figure 2-168. Engine Mounts

REPLACEMENT

FASTENER	TORQUE VALUE	
Rear fender cover rear screw: all	12-18 ft-lbs	16.3-24.4 Nm
Rear fender cover front screw: all	12-18 ft-lbs	16.3-24.4 Nm
Rear shock, lower screws: all	30-40 ft-lbs	40.7-54.2 Nm

Removal

1. Support motorcycle so rear wheel is off floor or lift in order to remove rear fender fasteners.
2. See 2.22 REAR SHOCK ABSORBERS. Remove lower shock screws and lower rear wheel to floor or lift.
3. Remove rear screws from rear fender and turn signals.
4. Remove front screws from rear fender.

Installation

NOTE

See 2.29 REAR FENDER. Install saree guards between fender and frame, using existing fender mounting hardware.

1. See Figure 2-169. Install front mounting screw through saree guard and leave loose.
2. See Figure 2-170. Install rear mounting screw through saree guard into turn signal. Tighten to 12-18 ft-lbs (16.3-24.4 Nm).
3. Tighten front screw to 12-18 ft-lbs (16.3-24.4 Nm).
4. Raise the rear wheel. Install lower shock screws. Tighten to 30-40 ft-lbs (40.7-54.2 Nm).

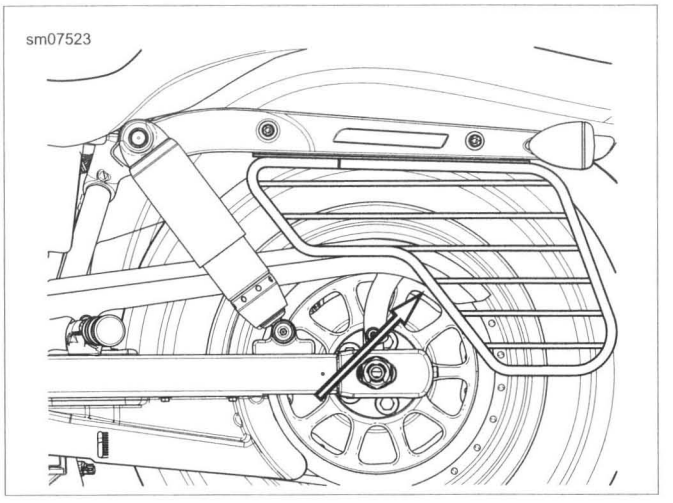

Figure 2-169. Saree Guard, Left Side

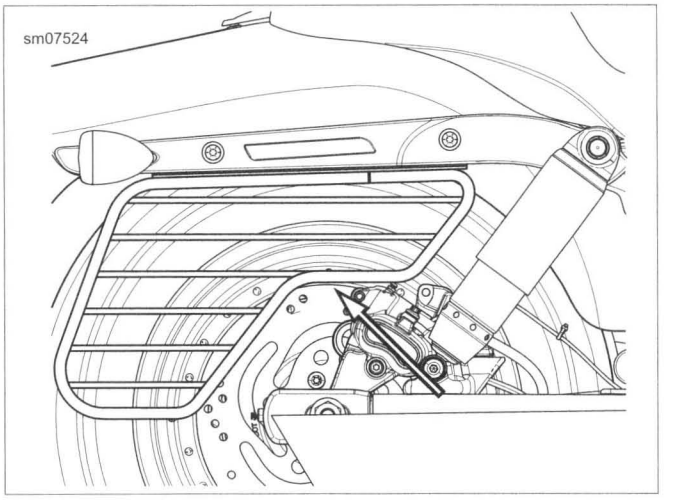

Figure 2-170. Saree Guard, Right Side

REMOVAL

1. Mark location of emblem with masking tape.

NOTE

Wear protective gloves.

2. Saw behind emblem with mono-filament fishing line or waxed dental floss to remove emblem.
3. Use 3M GENERAL PURPOSE ADHESIVE REMOVER to remove remaining foam backing tape and adhesive from mounting surface.

NOTE

For maximum bond, surface must be clean and dry.

4. Clean with a mixture of 50 percent isopropyl alcohol and 50 percent distilled water.

NOTE

Apply medallion within minutes of cleaning.

5. Allow to dry completely.

INSTALLATION

NOTES

- *Apply in ambient temperatures between 70-100 °F (21-38 °C).*
- *Do not remove protective film from adhesive until ready to apply.*
- *Do not bend emblem to fit contour of mounting surface.*

1. Test fit medallion in intended location.
   a. Check medallion against curve of mounting surface.
   b. Match left and right sides of fuel tank.

NOTES

- *Protect adhesive from grease, oil, dust, dirt and fingerprints.*
- *Once applied, do not shift medallion.*
- *The adhesive bonds in 72 hours at room temperature.*

2. Remove protective film from back of medallion.
3. Apply even pressure across entire surface with palms and fingers of both hands. Hold in place for 15 seconds.
4. Wait 20 minutes before touching medallion.
5. Wait 24 hours before washing.